US Department of Transportation
Federal Aviation Administration
Western Pacific Region

SAN DIEGO, CALIFORNIA
OPERATIONS ROOM - ETG LAB

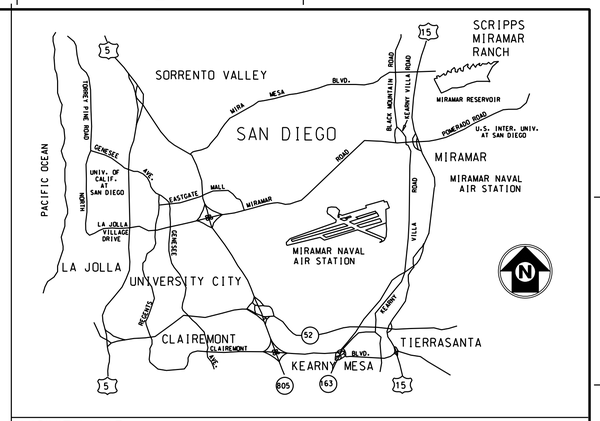

VICINITY MAP

NOT TO SCALE

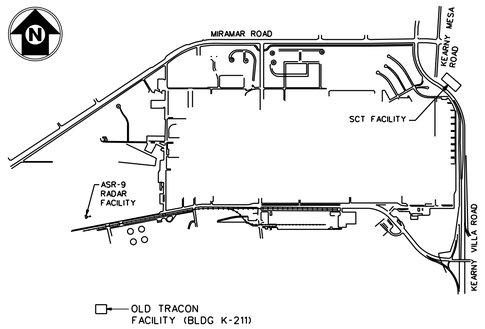

LOCATION MAP

NOT TO SCALE

DRAWING No.	DRAWING TITLE
WP-D-675-41800-CS1	INDEX DRAWINGS
WP-D-675-41800-A17	FLOOR PLAN
WP-D-675-41800-A18	SECTION AND DETAILS
WP-D-675-41800-A19	DOOR SCHEDULE AND DETAILS
WP-D-675-41800-A20	SECTION
SCT-D-STRACN-E003	EXISTING SECOND FLOOR LIGHTING PLAN
SCT-D-STRACN-E006	SECOND FLOOR ETG-LAB, POWER PLAN
SCT-D-STRACN-E007	SECOND FLOOR ETG-LAB, LIGHTING PLAN
SCT-D-STRACN-E015	PANEL SCHEDULES
SCT-D-STRACN-E016	PANEL SCHEDULES
WP-D-675-41800-M3	HVAC DUCT LAYOUT - SECOND FLOOR ETG LAB
WP-D-675-41800-M4	SUPPLY AIR PLENUM DETAILS
WP-D-675-41800-M5	VAV TERMINAL BOX DETAILS
WP-D-675-41800-M6	FIRE PROTECTION PLAN
WP-D-675-41800-M8	HVAC DEMOLITION DETAILS
WP-D-675-41800-S6	STRUCTURAL PLAN AND DETAILS
WP-D-675-41800-S7	CONSOLE SEISMIC RESTRAINT PLAN AND DETAILS

REFERENCE DRAWING No.	DRAWING TITLE
WP-E-675-41800-E0.1	SYMBOLS AND LEGEND

PARSONS
WESTERN PACIFIC REGION
CONTINENTAL PARK, SUITE 2500
3601 AVIATION BLVD.
MANHATTAN BEACH, CALIFORNIA 90266
PHONE NO. (310) 536-1100

PROJECT NUMBER: TSSC - 3

TSSC WORK RELEASE NO.

REV	DATE	DESCRIPTION	JCN	REDLINE DATE	APVD

DEPARTMENT OF TRANSPORTATION
FEDERAL AVIATION ADMINISTRATION
WESTERN PACIFIC REGION — LOS ANGELES, CALIFORNIA

SOUTHERN CALIFORNIA TRACON
OPERATIONS ROOM - ETG LAB

INDEX DRAWINGS

SANTA DIEGO, CA

REVIEWED BY	SUBMITTED BY	APPROVED BY
	NOT FOR SIGNATURE	NOT FOR SIGNATURE
	NOT FOR SIGNATURE	NOT FOR SIGNATURE
	NOT FOR SIGNATURE	NOT FOR SIGNATURE
	NOT FOR SIGNATURE	NOT FOR SIGNATURE
	System Engineer, ANI-940	Platform Manager, ANI-940

DESIGNED D.D. — ISSUED BY — DATE 05/28/04 — JCN

DRAWN RLH — DRAWING NO WP-D-675-41800-CS1 — REV

CHECKED N.D.

$FILE$ $DATE$ $TIME$ $NAME$

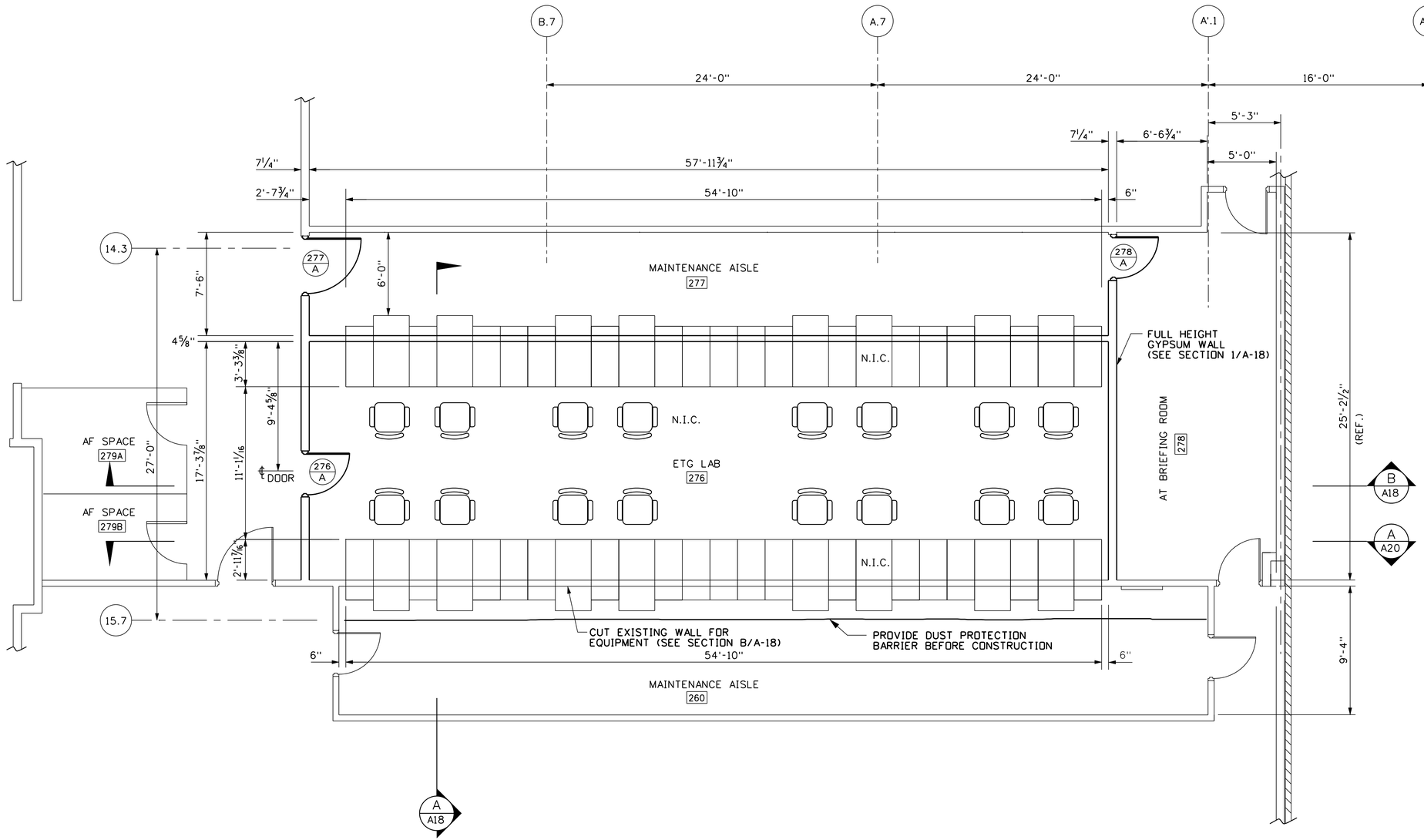

ETG LAB PLAN

¼" = 1'-0"

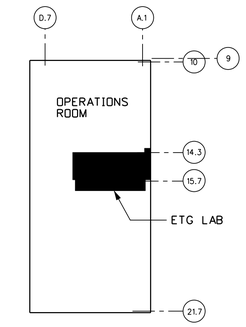

KEY PLAN
N.T.S.

NOTES:

1. BUILT THE FULL HEIGHT WALLS BEFORE BEGINNING THE STRUCTURAL STEEL WORK THE FULL HEIGHT WALL WILL FUNCTION AS CONSTRUCTION BARRIER.
2. NIC = NOT IN CONTRACT.
3. WORK SHOWN IN LIGHT LINE IS EXISTING. WORK SHOWN IN BOLD (HEAVY LINE) IS NEW.

4' 0 4' 8'

SCALE: 1/4" = 1'-0"

REV	DATE	DESCRIPTION	JCN	REDLINE DATE	APVD

DEPARTMENT OF TRANSPORTATION
FEDERAL AVIATION ADMINISTRATION
WESTERN PACIFIC REGION LOS ANGELES, CALIFORNIA

SOUTHERN CALIFORNIA TRACON
OPERATIONS ROOM - ETG LAB

FLOOR PLAN

SAN DIEGO CA

PARSONS
WESTERN PACIFIC REGION
CONTINENTAL PARK, SUITE 2500
3601 AVIATION BLVD.
MANHATTAN BEACH, CALIFORNIA 90266
PHONE NO. (310) 536-1100

PROJECT NUMBER	TSSC WORK RELEASE NO.
TSSC - 3	135

REVIEWED BY

SUBMITTED BY: NOT FOR SIGNATURE NOT FOR SIGNATURE NOT FOR SIGNATURE NOT FOR SIGNATURE
SYSTEM ENGINEER, ANI-940

APPROVED BY: NOT FOR SIGNATURE NOT FOR SIGNATURE NOT FOR SIGNATURE NOT FOR SIGNATURE
PLATFORM MANAGER, ANI-940

DESIGNED DD
DRAWN RLH
CHECKED RM
ISSUED BY
DATE 05/28/04 JCN
DRAWING NO WP-D-675-41800-A17 REV

$FILES $DATES $TIMES $NAMES

...\AWP-55\wp-d-675-41800-a17.dgn 07/09/2004 05:04:31 PM

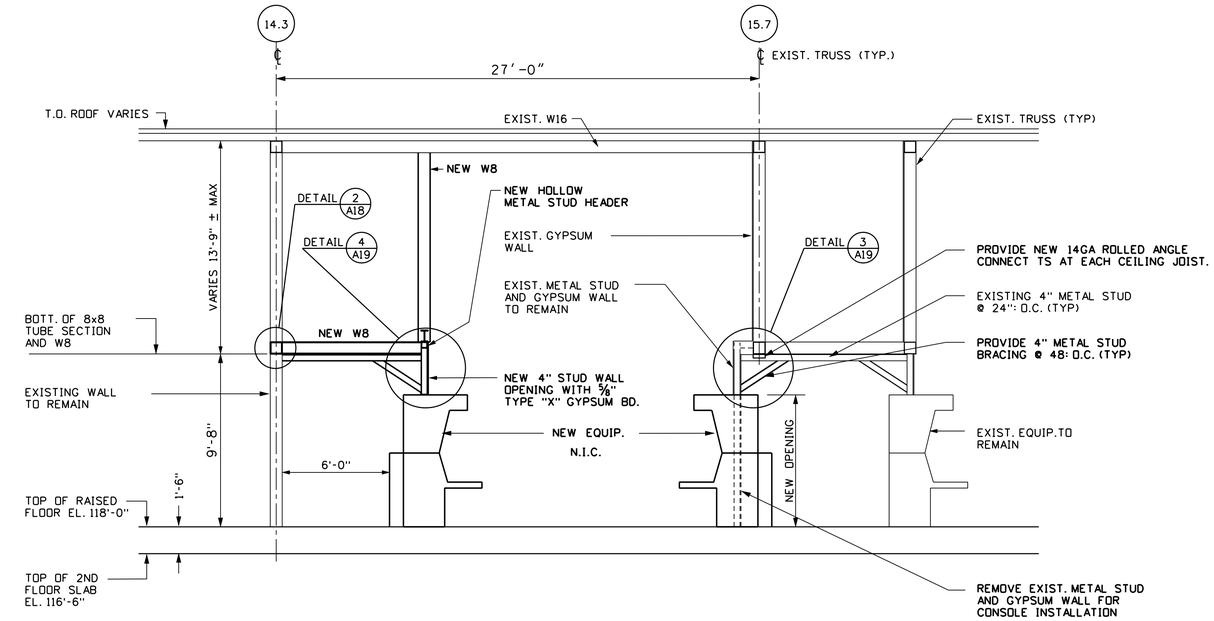

ETG LAB SECTION (A / A17)
SCALE: 1/4" = 1'-0"

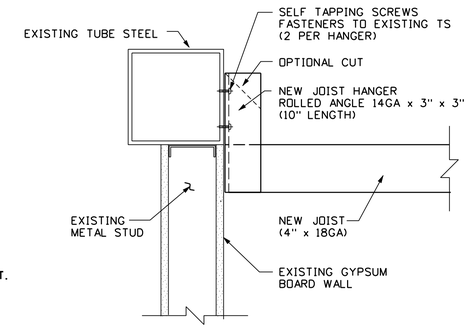

DETAIL (2 / A18)
SCALE: 1" = 1'-0"

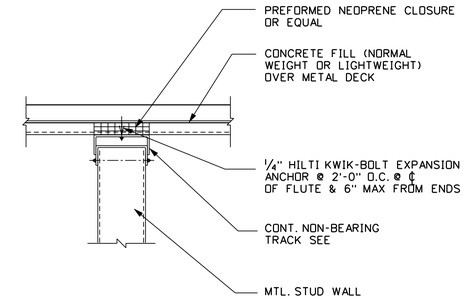

NON-BEARING STD. TO DECK (PERP) OR CONC. CEILING (3 / A18)
N.T.S.

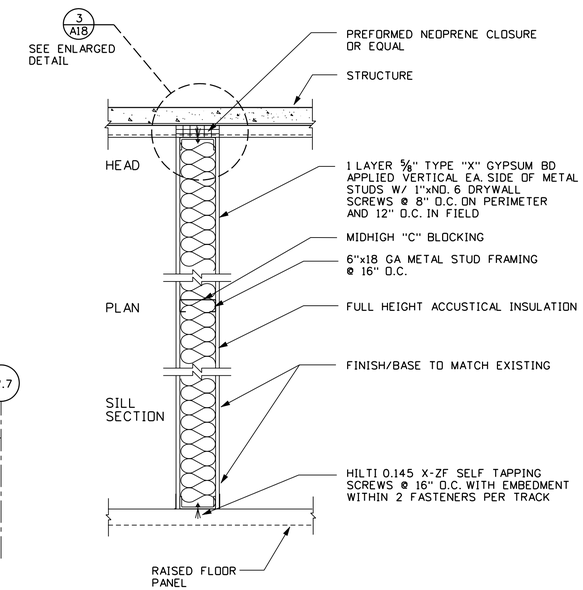

TYP. INTERIOR PARTITION (N.R.) (1 / A18 A17)
N.T.S.

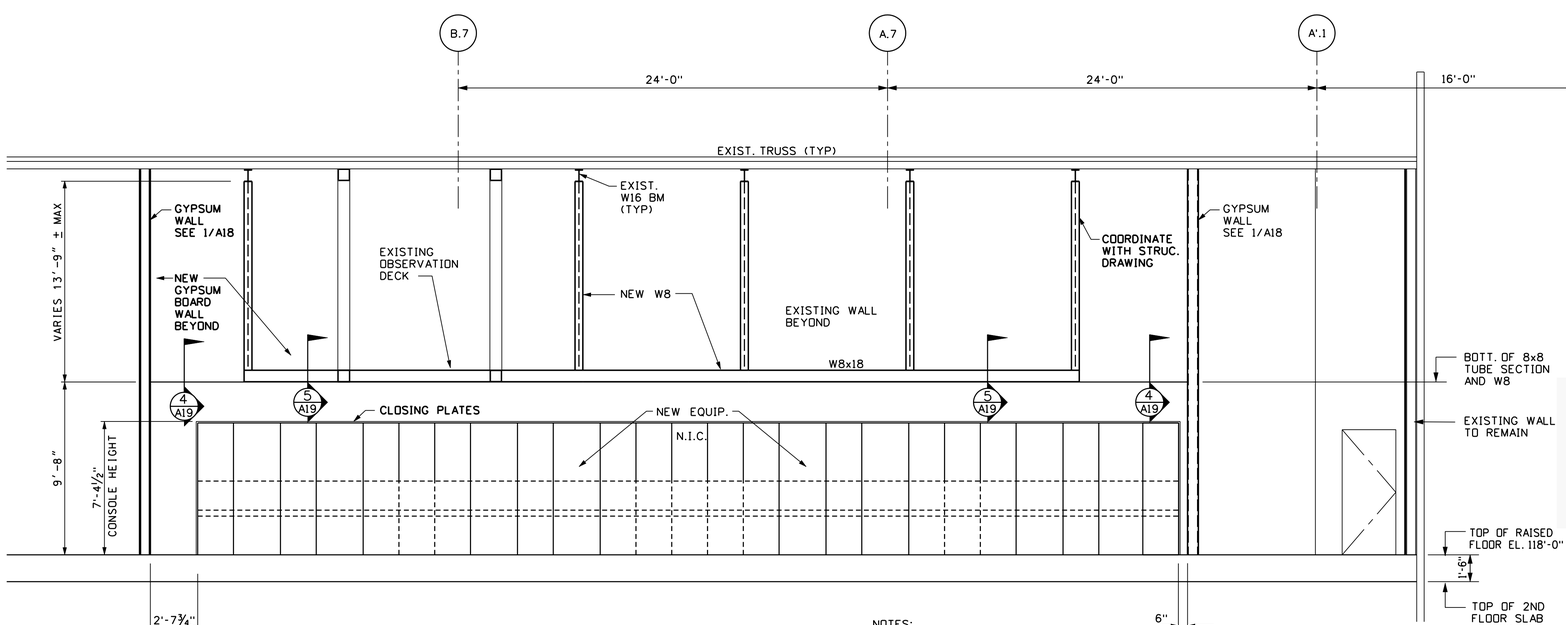

ETG LAB SECTION (B / A17)
SCALE: 1/4" = 1'-0"

NOTES:

1. WORK SHOWN IN LIGHT LINE IS EXISTING. WORK SHOWN IN BOLD (HEAVY LINE) IS NEW.
2. NIC = NOT IN CONTRACT.

REV	DATE	DESCRIPTION	JCN	REDLINE DATE	APVD

DEPARTMENT OF TRANSPORTATION
FEDERAL AVIATION ADMINISTRATION
WESTERN PACIFIC REGION — LOS ANGELES, CALIFORNIA

SOUTHERN CALIFORNIA TRACON
OPERATIONS ROOM - ETG LAB
SECTIONS & DETAILS

SAN DIEGO — CA

PARSONS
WESTERN PACIFIC REGION
CONTINENTAL PARK, SUITE 2500
3601 AVIATION BLVD.
MANHATTAN BEACH, CALIFORNIA 90266
PHONE NO. (310) 536-1100

PROJECT NUMBER TSSC - 3 | TSSC WORK RELEASE NO. 135

REVIEWED BY | SUBMITTED BY NOT FOR SIGNATURE | APPROVED BY NOT FOR SIGNATURE
SYSTEM ENGINEER, ANI-940 | PLATFORM MANAGER, ANI-940
DESIGNED DD | ISSUED BY | DATE 05/28/04 | JCN
DRAWN RLH | DRAWING NO WP-D-675-41800-A18 | REV
CHECKED RM

$NAME$ $TIME$ $FILE$ $DATE$

...\AWP-55\wp-d-675-41800-a18.dgn 07/09/2004 05:05:07 PM

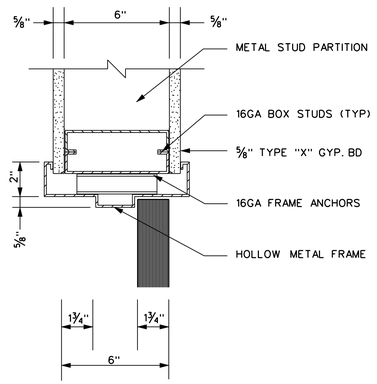

INT. HEAD (NON-RATED) TYP.
JAMB (SIM.)

DETAIL 1/A19
SCALE: 3" = 1'-0"

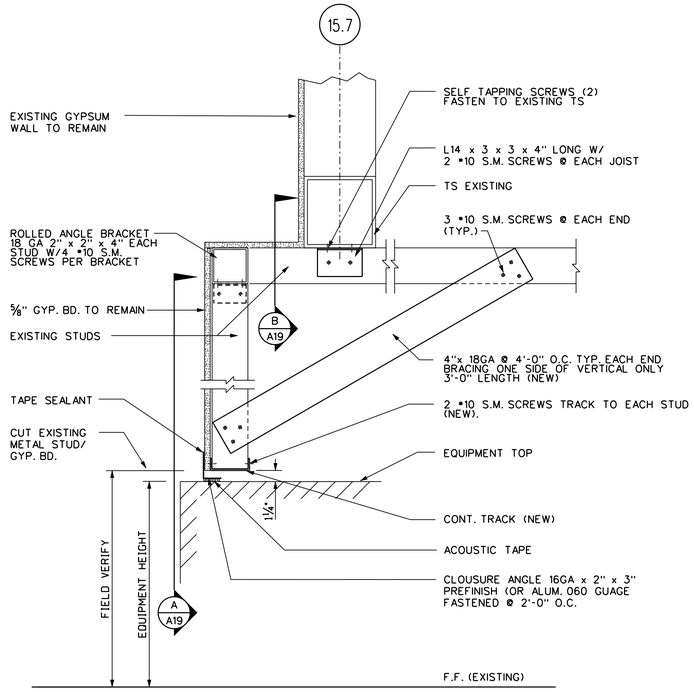

DETAIL 3/A19 A18 A20
SCALE: 1 1/2" = 1'-0"

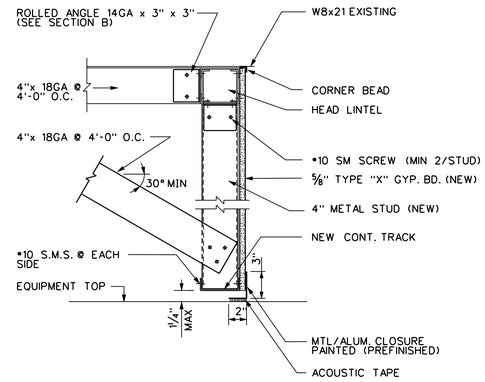

DETAIL 4/A18
SCALE: 1 1/2" = 1'-0"

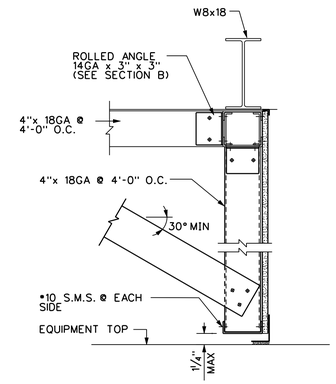

DETAIL 5/A18
SCALE: 1 1/2" = 1'-0"

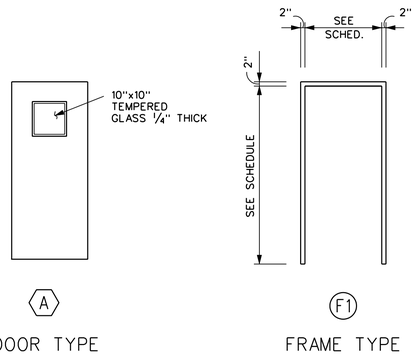

DOOR TYPE

FRAME TYPE

DETAIL 2/A19
N.T.S.

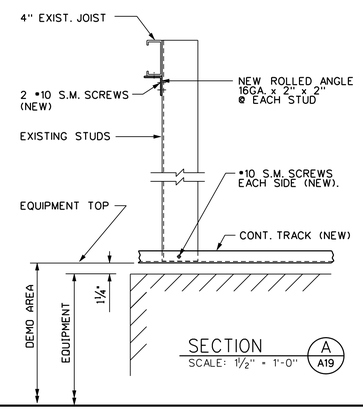

SECTION A/A19
SCALE: 1 1/2" = 1'-0"

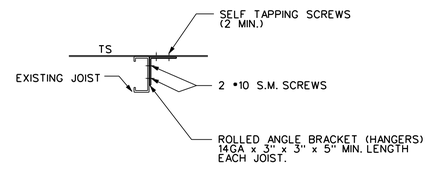

SECTION B/A19
SCALE: 1 1/2" = 1'-0"

DOOR SCHEDULE

DOOR NO.	LOCATION	DOORS TYPE	DOORS MATERIAL	DOORS NOMINAL SIZE WIDTH	DOORS NOMINAL SIZE HEIGHT	DOORS NOMINAL SIZE THICK.	FRAME TYPE	FRAME MATERIAL	FRAME DETAIL HEAD	FRAME DETAIL JAMB	FRAME DETAIL SILL	HDWE SET	REMARKS
276A	ETG LAB	A	H.M.	3'-0"	7'-0"	1 3/4"	F1	H.M.	1/A19	1/A19	–	HW-1	SP. VG.
277A	MAINTENANCE AISLE	A	H.M.	4'-0"	8'-0"	1 3/4"	F1	H.M.	1/A19	1/A19	–	HW-2	UNDERCUT DOOR 1/2"
278A	MAINTENANCE AISLE	A	H.M.	3'-0"	7'-0"	1 3/4"	F1	H.M.	1/A19	1/A19	–	HW-3	UNDERCUT DOOR 1/2"

DOOR ABBREVIATION
HM - HOLLOW METAL
SP - SOUND PROOF
VG - VISION GLASS

PARSONS
WESTERN PACIFIC REGION
CONTINENTAL PARK, SUITE 2500
3601 AVIATION BLVD.
MANHATTAN BEACH, CALIFORNIA 90266
PHONE NO. (310) 536-1100

PROJECT NUMBER: TSSC - 3
TSSC WORK RELEASE NO.: 135

REV	DATE	DESCRIPTION	JCN	REDLINE DATE	APVD

DEPARTMENT OF TRANSPORTATION
FEDERAL AVIATION ADMINISTRATION
WESTERN PACIFIC REGION — LOS ANGELES, CALIFORNIA

SOUTHERN CALIFORNIA TRACON
OPERATIONS ROOM – ETG LAB

DOOR SCHEDULE & DETAILS

SAN DIEGO — CA

REVIEWED BY
SUBMITTED BY: NOT FOR SIGNATURE
APPROVED BY: NOT FOR SIGNATURE
SYSTEM ENGINEER, ANI-940
PLATFORM MANAGER, ANI-940
DESIGNED: DD
DRAWN: RLH
CHECKED: RM
ISSUED BY
DATE: 05/28/04
JCN
DRAWING NO: WP-D-675-41800-A19
REV

$NAME$
$TIME$
$FILE$
$DATE$

...\AWP-55\wp-d-675-41800-a19.dgn 07/09/2004 05:05:37 PM

NOTES:

1. WORK SHOWN IN LIGHT LINE IS EXISTING.
   WORK SHOWN IN BOLD (HEAVY LINE) IS NEW.
2. NIC - NOT IN CONTRACT.

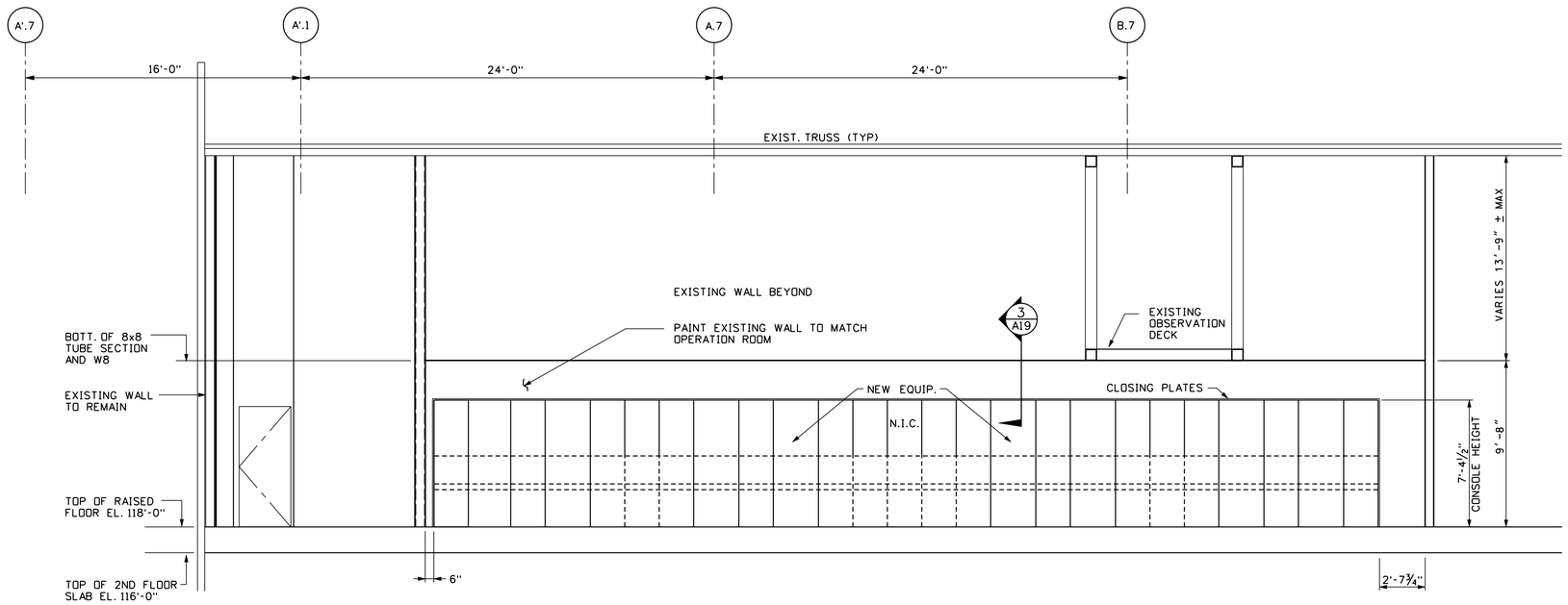

A / A17 ETG LAB SECTION
SCALE: ¼" = 1'-0"

REV	DATE	DESCRIPTION	JCN	REDLINE DATE	APVD

DEPARTMENT OF TRANSPORTATION
FEDERAL AVIATION ADMINISTRATION
WESTERN PACIFIC REGION — LOS ANGELES, CALIFORNIA

SOUTHERN CALIFORNIA TRACON
OPERATIONS ROOM - ETG LAB
SECTION

SAN DIEGO — CA

PARSONS
WESTERN PACIFIC REGION
CONTINENTAL PARK, SUITE 2500
3601 AVIATION BLVD.
MANHATTAN BEACH, CALIFORNIA 90266
PHONE NO. (310) 536-1100

PROJECT NUMBER: TSSC - 3
TSSC WORK RELEASE NO.: 135

REVIEWED BY
SUBMITTED BY: NOT FOR SIGNATURE
SYSTEM ENGINEER, ANI-940
APPROVED BY: NOT FOR SIGNATURE
PLATFORM MANAGER, ANI-940
DESIGNED: DD
DRAWN: RLH
CHECKED: RM
ISSUED BY
DATE: 05/28/04
JCN
DRAWING NO: WP-D-675-41800-A20
REV

$FILE$ $DATE$ $TIME$ $NAME$

...\AWP-55\wp-d-675-41800-a20.dgn 07/09/2004 05:06:14 PM

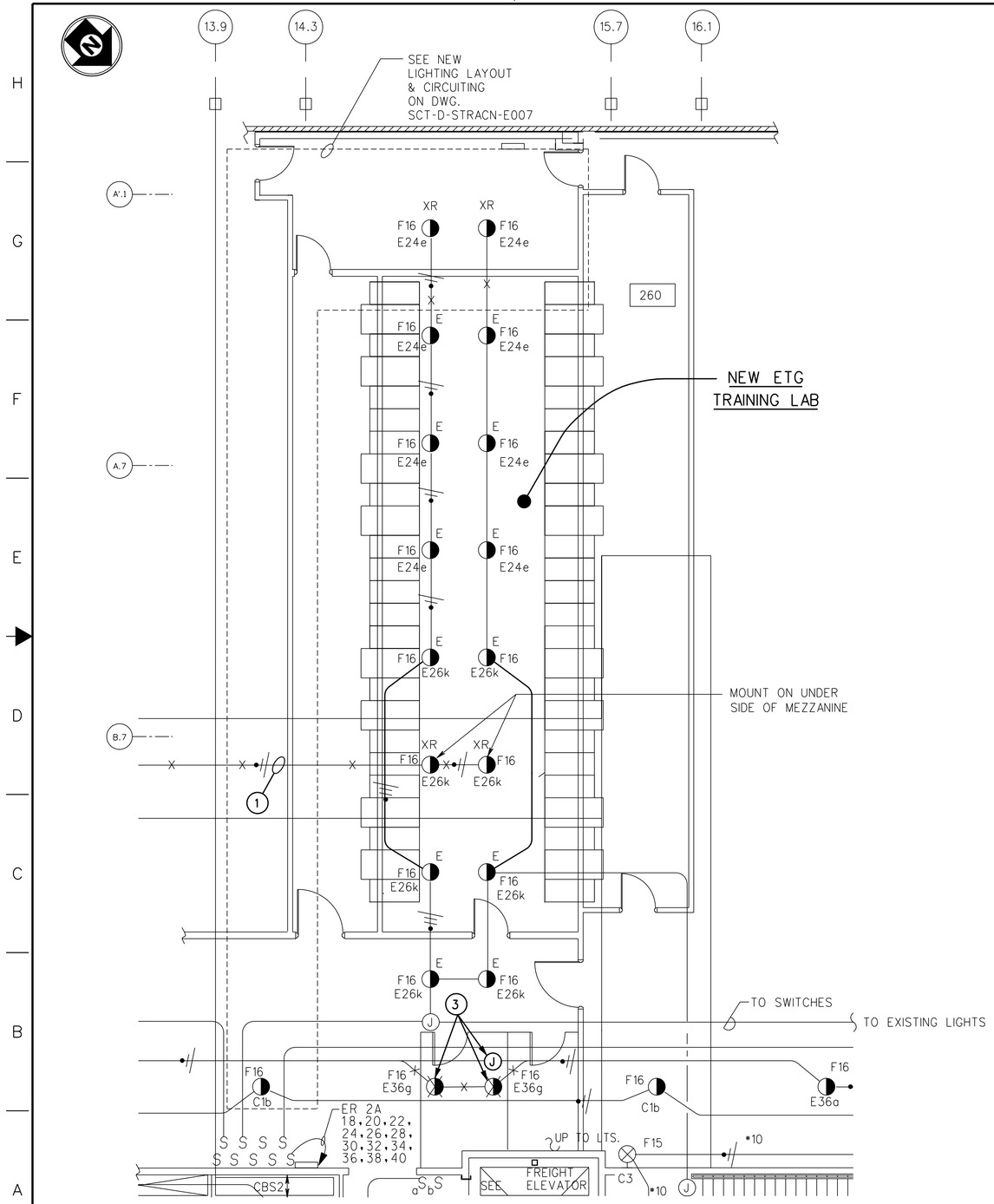

LIGHTING - SECOND FLOOR OPERATIONS WING

SCALE: 3/16" = 1'-0"

4' 0 4' 8' 12'

SCALE: 3/16" = 1'-0"

REFERENCE NOTES:

1. EXISTING CONDUIT & WIRES TO BE REMOVED UP TO NEXT ADJACENT OUTLET BOX OF FIXTURES.
2. NOT USED.
3. REMOVE EXISTING LIGHTING FIXTURES AND INTERCEPT WIRING WITH NEW JUNCTION BOX OR BOXES.

DEMO NOTES:

X -DENOTES EXISTING CONDUIT & WIRES TO BE REMOVED U.O.N.

XR -DENOTES EXISTING DEVICE OR EQUIPMENT TO BE REMOVED.

E -DENOTES EXISTING DEVICE OR EQUIPMENT TO REMAIN.

THE ELECTRICAL CONTRACTOR SHALL PERFORM ALL NECESSARY FIELD SURVEY. COORDINATE WITH TSSC III REPRESENTATIVE AND OTHER TRADE CONTRACTORS PRIOR TO COMMENCEMENT OF ANY WORK, TO AVOID CONFLICT IN THE FIELD.

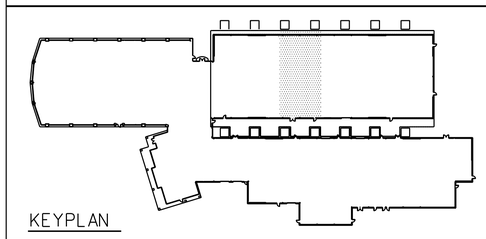

KEYPLAN

REV	DATE	DESCRIPTION	JCN	REDLINE DATE	APVD

DEPARTMENT OF TRANSPORTATION
FEDERAL AVIATION ADMINISTRATION
WESTERN PACIFIC REGION — LOS ANGELES, CA

SOUTHERN CALIFORNIA TRACON OPERATIONS ROOM - ETG LAB EXISTING SECOND FLOOR LIGHTING PLAN

SAN DIEGO — CA

PARSONS
WESTERN PACIFIC REGION
CONTINENTAL PARK, SUITE 2500
3601 AVIATION BLVD.
MANHATTAN BEACH, CALIFORNIA 90266
PHONE NO. (310) 536-1100

PROJECT NUMBER	TSSC WORK RELEASE NO.
TSSC - 3	135

REVIEWED BY	SUBMITTED BY: NOT FOR SIGNATURE	APPROVED BY: NOT FOR SIGNATURE
	SYSTEM ENGINEER, ANI-940	PLATFORM MANAGER, ANI-940
	DESIGNED R.T.	ISSUED BY
	DRAWN E.H.	DATE 05/28/04
	CHECKED S.C.	DRAWING NO SCT-D-STRACN-E003

REV

...\AWP-55\sct-d-stracn-e003.dgn 07/09/2004 10:31:26 PM

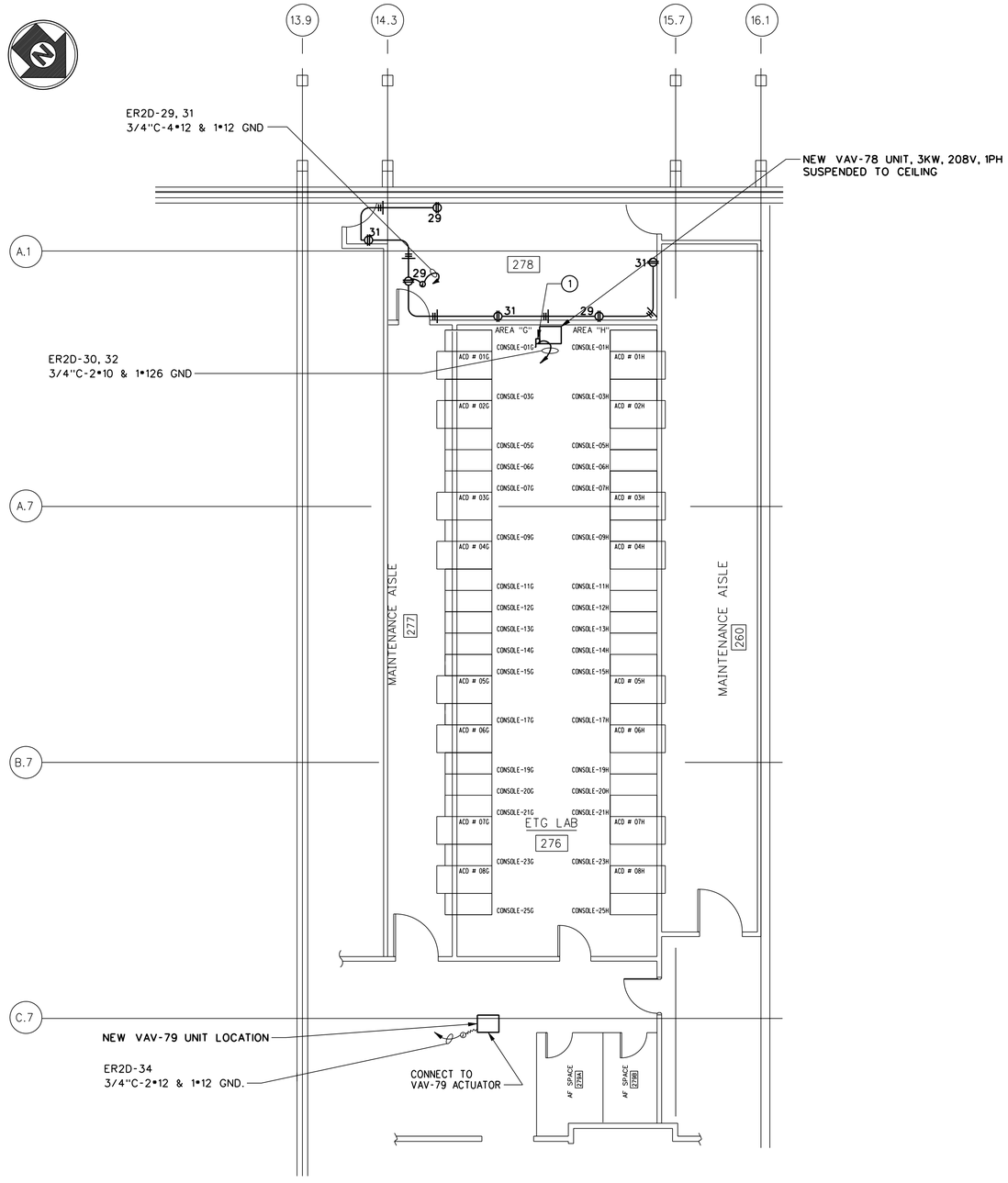

SECOND FLOOR - ETG LAB POWER PLAN

8' 0 8' 16'
SCALE: 1/8" = 1'-0"

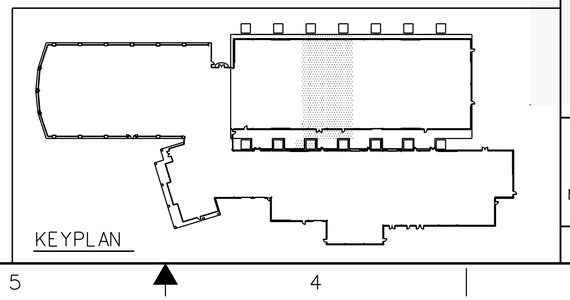

NOTES:

1. FURNISH AND INSTALL NEW 30A, 2P, 250V DISC SWITCH WITH 20A FUSES, SECURELY MOUNTED ADJACENT TO VAV-78 UNIT. MAKE ALL REQUIRED CONNECTION FOR COMPLETE, SAFE AND OPERABLE SYSTEM.

REV	DATE	DESCRIPTION	JCN	REDLINE DATE	APVD

DEPARTMENT OF TRANSPORTATION
FEDERAL AVIATION ADMINISTRATION
WESTERN PACIFIC REGION — LOS ANGELES, CALIFORNIA

SOUTHERN CALIFORNIA TRACON
OPERATIONS ROOM - ETG LAB
SECOND FLOOR ETG - LAB
POWER PLAN

SAN DIEGO — CA

PARSONS
WESTERN PACIFIC REGION
CONTINENTAL PARK, SUITE 2500
3601 AVIATION BLVD.
MANHATTAN BEACH, CALIFORNIA 90266
PHONE NO. (310) 536-1100

PROJECT NUMBER: TSSC - 3
TSSC WORK RELEASE NO.: 135

REVIEWED BY
SUBMITTED BY: NOT FOR SIGNATURE
SYSTEM ENGINEER, ANI-940
APPROVED BY: NOT FOR SIGNATURE
PLATFORM MANAGER, ANI-940
DESIGNED: R.T.
DRAWN: E.H.
CHECKED: S.C.
ISSUED BY
DATE: 05/28/04
JCN
DRAWING NO: SCT-D-STRACN-E006
REV

$NAME$ $TIME$ $FILE$ $DATE$

...\AWP-55\sct-d-stracn-e006.dgn 07/09/2004 04:11:07 PM

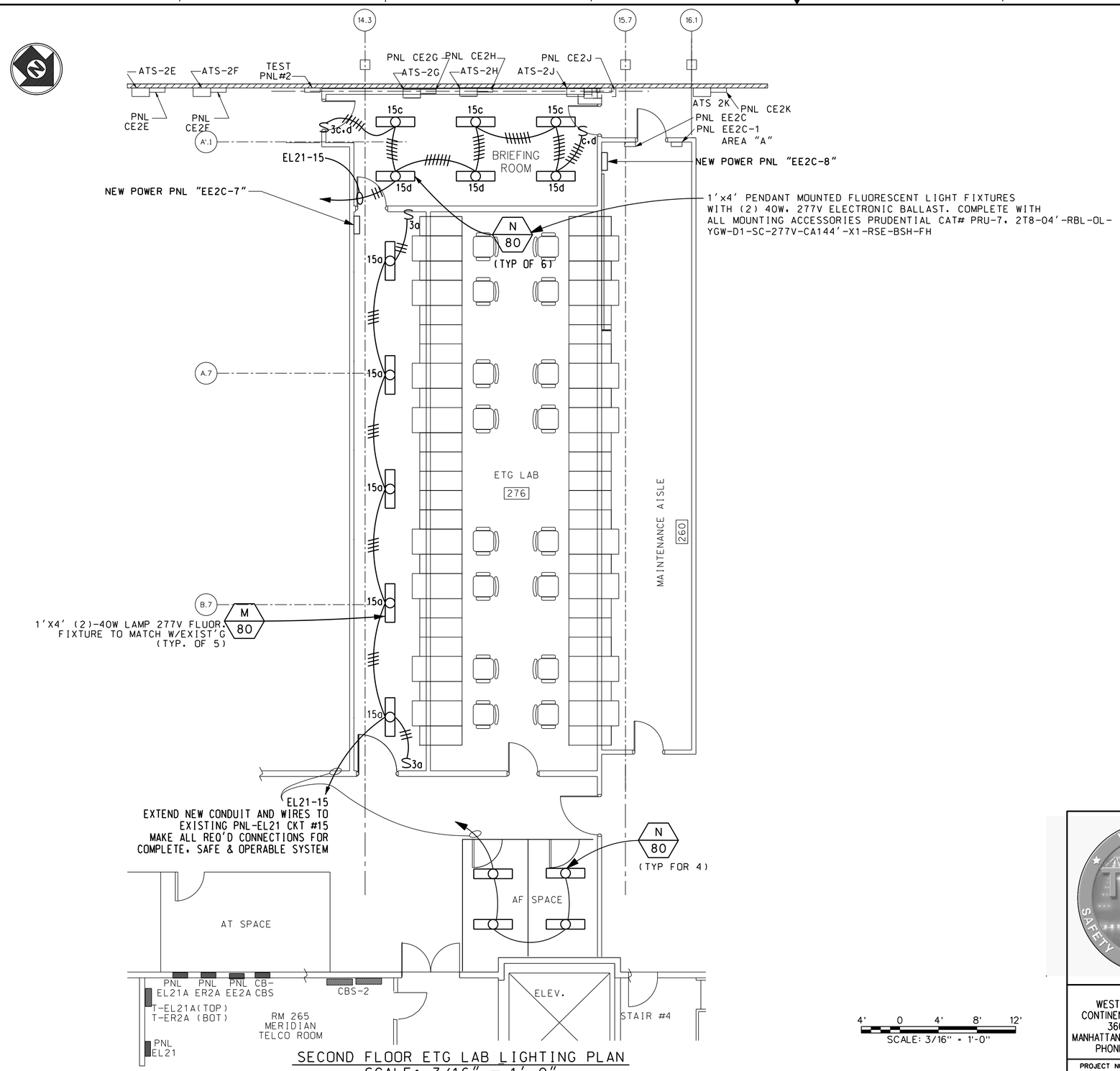

SECOND FLOOR ETG LAB LIGHTING PLAN
SCALE: 3/16" = 1'-0"

4' 0 4' 8' 12'
SCALE: 3/16" = 1'-0"

NOTES:

1. FOR REFERENCE, SEE ELECTRICAL SYMBOLS AND LEGEND ON EXISTING DWG. WP-E-675-41800-E0.1.
2. WORK SHOWN IN LIGHT LINE IS EXISTING, WORK SHOWN IN BOLD (HEAVY LINES) IS NEW.
3. FOR PANEL SCHEDULES, REFER TO DRAWING SCT-D-STRACN-E015, E016.

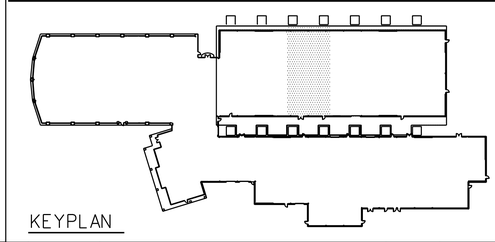

KEYPLAN

REV	DATE	DESCRIPTION	JCN	REDLINE DATE	APVD

DEPARTMENT OF TRANSPORTATION
FEDERAL AVIATION ADMINISTRATION
WESTERN PACIFIC REGION — LOS ANGELES, CALIFORNIA

SOUTHERN CALIFORNIA TRACON
OPERATIONS ROOM - ETG LAB
SECOND FLOOR ETG - LAB
LIGHTING PLAN

SAN DIEGO — CA

PARSONS
WESTERN PACIFIC REGION
CONTINENTAL PARK, SUITE 2500
3601 AVIATION BLVD.
MANHATTAN BEACH, CALIFORNIA 90266
PHONE NO. (310) 536-1100

PROJECT NUMBER: TSSC - 3
TSSC WORK RELEASE NO.: 135

REVIEWED BY
SUBMITTED BY: NOT FOR SIGNATURE — SYSTEM ENGINEER, ANI-940
APPROVED BY: NOT FOR SIGNATURE — PLATFORM MANAGER, ANI-940
DESIGNED: R.T.
DRAWN: E.H.
CHECKED: S.C.
ISSUED BY
DATE: 05/28/04
JCN
DRAWING NO: SCT-D-STRACN-E007
REV

$FILES $DATES $TIMES $NAMES

...\AWP-55\sct-d-stracn-e007.dgn 07/09/2004 04:13:18 PM

VOLTAGE 277/480V
PHASE 3 WIRE 3
BUS AMPS

PANEL EL21
MAIN AMPS 400A MLO

LOCATION RM 265
MOUNTING SURFACE
DWG. NO. -

	DESCRIPTION	REC	LTG	MISC	VOLT AMPS A	VOLT AMPS B	VOLT AMPS C	BRKR AMP	BRKR P	CKT NO.	BUS CONN.	CKT NO.	BRKR P	BRKR AMP	VOLT AMPS A	VOLT AMPS B	VOLT AMPS C	MISC	LTG	REC	DESCRIPTION
	PANEL ER2C							50	3	1		2									PANEL EL21B
	PANEL ER2C									3		4									PANEL EL21B
	PANEL ER2C									5		6									PANEL EL21B
	SPACE									7		8	3	50							PANEL - ER2D
	SPACE									9		10									PANEL - ER2D
	SPACE									11		12									PANEL - ER2D
	SPACE									13		14									SPACE
(1)	LIGHTING							20	1	15		16									SPACE
	SPACE									17		18									SPACE
	SPACE									19		20									SPACE
	SPACE									21		22									SPACE
	SPACE									23		24									SPACE
	SPACE									25		26									SPACE
	SPACE									27		28									SPACE
	SPACE									29		30									SPACE
	MTS EC1A CBS 31,33,35							50	3	31		32	3	50							PANEL EL21A VIA T-EL21-A CBS 32,34,36
										33		34									
										35		36									
	PANEL ER2A VIA T-ER-2A CB 37,39,41							125	3	37		38									UNUSABLE
										39		40									UNUSABLE
										41		42									UNUSABLE
	SUB TOTALS				-	-	-								-	-	-				SUB TOTALS

TOTAL PHASE A 24.1 • 12.03 (T-EL21C)
TOTAL PHASE B 31.6 • 12.03(T-EL21C)
TOTAL PHASE C 31.9 • 12.03(T-EL21C)
TOTAL PHASE A,B,C 123.6A

CL VA
x 1.25 =
NON CL VA =
TOTAL VA =
AMPS =

NOTES:

1. FURNISH & INSTALL NEW 20A, 1P, 10KAIC CIRCUIT BREAKER (MATCH EXISTING)

REV	DATE	DESCRIPTION	JCN	REDLINE DATE	APVD

DEPARTMENT OF TRANSPORTATION
FEDERAL AVIATION ADMINISTRATION
WESTERN PACIFIC REGION LOS ANGELES, CALIFORNIA

SOUTHERN CALIFORNIA TRACON OPERATIONS ROOM - ETG LAB PANEL SCHEDULES

SAN DIEGO CA

PARSONS
WESTERN PACIFIC REGION
CONTINENTAL PARK, SUITE 2500
3601 AVIATION BLVD.
MANHATTAN BEACH, CALIFORNIA 90266
PHONE NO. (310) 536-1100

PROJECT NUMBER TSSC - 3
TSSC WORK RELEASE NO. 135

REVIEWED BY
SUBMITTED BY NOT FOR SIGNATURE NOT FOR SIGNATURE NOT FOR SIGNATURE NOT FOR SIGNATURE
SYSTEM ENGINEER, ANI-940
APPROVED BY NOT FOR SIGNATURE NOT FOR SIGNATURE NOT FOR SIGNATURE NOT FOR SIGNATURE
PLATFORM MANAGER, ANI-940
DESIGNED R.T.
DRAWN E.H.
CHECKED SC
ISSUED BY
DATE 05/28/04
JCN
DRAWING NO SCT-D-STRACN-E015
REV

$FILE$ $DATE$ $TIME$ $NAME$

...\AWP-55\sct-d-stracn-e015.dgn 07/09/2004 04:57:21 PM

VOLTAGE 120/208V
PHASE 3 WIRE 4
BUS AMPS 225A

PANEL ER2D
MAIN AMPS 125A - 3P

LOCATION ELEC RM 259C
MOUNTING SURFACE
DWG. NO. SCT-D-STRACN-E016

DESCRIPTION	REC	L T G	MISC	VOLT AMPS A	VOLT AMPS B	VOLT AMPS C	BRKR AMP	P	CKT NO.	BUS CONN.	CKT NO.	P	BRKR AMP	VOLT AMPS A	VOLT AMPS B	VOLT AMPS C	MISC	L T G	REC	DESCRIPTION
SPARE							20	1	1		2	1	20							SPARE
							20	1	3		4	1	20							
							20	1	5		6	1	20							
							20	1	7		8	1	20							
							20	1	9		10	1	20							
							20	1	11		12	1	20							
							20	1	13		14	1	20							
							20	1	15		16	1	20							
							20	1	17		18	1	20							
							20	1	19		20	1	20							
							20	1	21		22	1	20							
							20	1	23		24	1	20							
							20	1	25		26	1	20							
							20	1	27		28	1	20							
BRIEFING RM #278 - (RECEPTACLE)	3					540	20	1	29		30	2	20			1500				VAU - 78 UNIT
BRIEFING RM #278 - (RECEPTACLE)	3			540			20	1	31		32	/	20	1500						-
AF SPACE (RECEPTACLE)	1				540		20	1	33		34	1	20		200		1			VAU - UNIT 79 ACTUATOR
CONSOLE CONV. OUTLETS						1600	20	1	35		36	1	20			1600				CONSOLE CONV. OUTLETS
				1600			20	1	37		38	1	20	1600						
					1600		20	1	39		40	1	20		1600					
SPARE							20	1	41		42	1	20							SPARE
SUB TOTALS				2140	2140	2140								3100	1800	3100				SUB TOTALS

TOTAL PHASE A 5240 W
TOTAL PHASE B 3940 W
TOTAL PHASE C 5240 W

TOTAL PHASE A,B,C 14420 W

CL VA ____ x 1.25 =
NON CL VA = 14420 W
TOTAL VA = 14420 W
AMPS = 40 A

PARSONS
WESTERN PACIFIC REGION
CONTINENTAL PARK, SUITE 2500
3601 AVIATION BLVD.
MANHATTAN BEACH, CALIFORNIA 90266
PHONE NO. (310) 536-1100

PROJECT NUMBER	TSSC WORK RELEASE NO.
TSSC - 3	135

REV	DATE	DESCRIPTION	JCN	REDLINE DATE	APVD

DEPARTMENT OF TRANSPORTATION
FEDERAL AVIATION ADMINISTRATION
WESTERN PACIFIC REGION LOS ANGELES, CALIFORNIA

SOUTHERN CALIFORNIA TRACON
OPERATIONS ROOM - ETG LAB

PANEL SCHEDULES

SAN DIEGO CA

REVIEWED BY

SUBMITTED BY NOT FOR SIGNATURE NOT FOR SIGNATURE NOT FOR SIGNATURE NOT FOR SIGNATURE
SYSTEM ENGINEER, ANI-940

APPROVED BY NOT FOR SIGNATURE NOT FOR SIGNATURE NOT FOR SIGNATURE NOT FOR SIGNATURE
PLATFORM MANAGER, ANI-940

DESIGNED R.T.
DRAWN E.H.
CHECKED S.C.
ISSUED BY

DATE 05/28/04 JCN
DRAWING NO SCT-D-STRACN-E016 REV

$NAME$
$TIME$
$FILE$
$DATE$

...\AWP-55\sct-d-stracn-e016.dgn 07/09/2004 05:02:36 PM

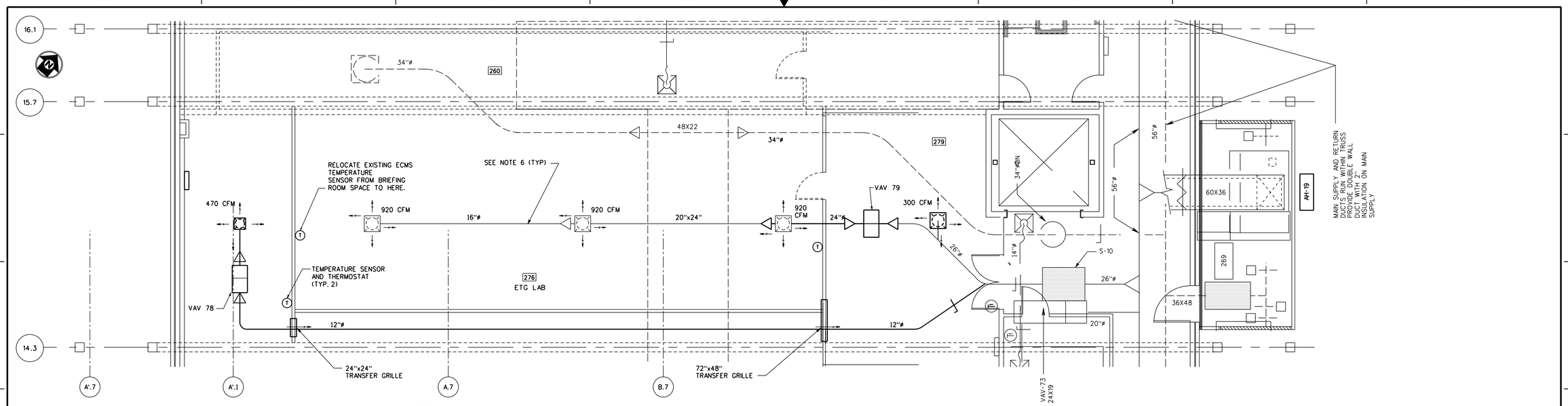

1 / M3 SECOND FLOOR ETG LAB - HVAC PLAN

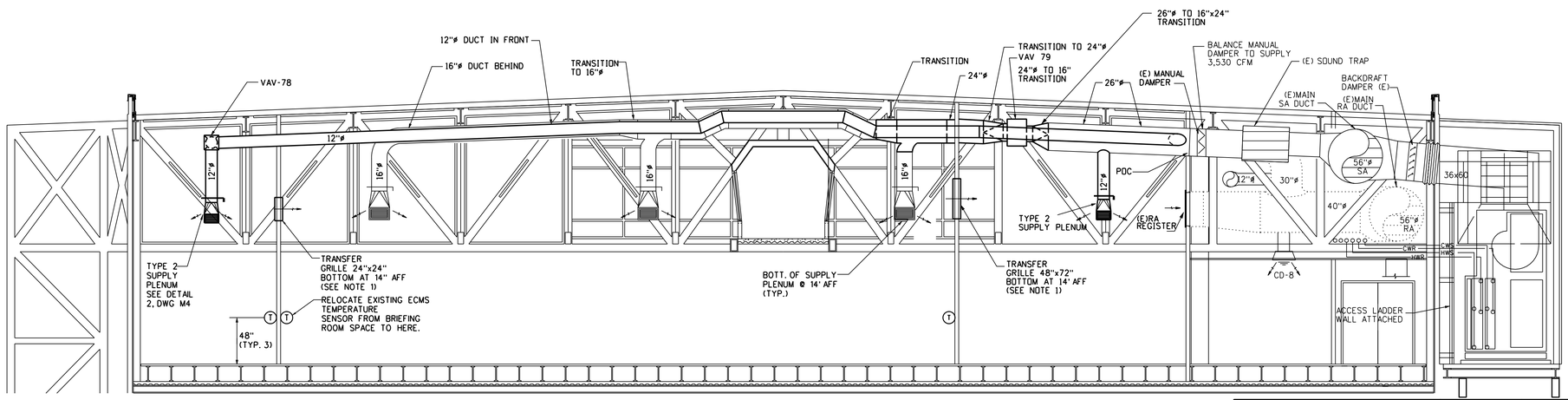

2 / M3 SECOND FLOOR ETG LAB - HVAC SECTION

NOTES:

1. MINIMUM TRANSFER GRILLE FREE AREA (Ak = 50%) OF LOUVER SIZE. TRANSFER GRILLES SHALL BE FIELD LOCATED WITH ELEVATION AS SHOWN. INSTALL PER MANUFACTURER'S RECOMMENDATION. SEE DET 1 DWG M4.
2. SEE DRAWING M5 FOR SEQUENCE OF OPERATIONS.
3. ALL MECHANICAL EQUIPMENT AND DUCTWORK SHALL BE BRACED FOR SEISMIC RESTRAINT BASED ON CRITERIA FOR SEISMIC ZONE 4 MINIMUM SUPPORT SIZES AND INSTALLATION STANDARDS SHALL BE DETERMINED BY REFERENCES TO "SMACNA : HVAC DUCT CONSTRUCTION STANDARDS, METAL AND FLEXIBLE, 1995" AND "SMACNA : SEISMIC RESTRAINT MANUAL."
4. DUCT CONSTRUCTION AND INSTALLATION SHALL BE IN ACCORDANCE WITH "SMACNA : HVAC DUCT CONSTRUCTION STANDARDS, METAL AND FLEXIBLE, 1995."
5. WORK SHOWN IN LIGHT LINE IS EXISTING. WORK SHOWN IN BOLD (HEAVY LINE) IS NEW.
6. FOR DEMOLITION & RELOCATION OF EXISTING DUCT SEE DRAWING M8.

4' 0 4' 8' 12'
SCALE: 3/16" = 1'-0"

PARSONS
WESTERN PACIFIC REGION
CONTINENTAL PARK, SUITE 2500
3601 AVIATION BLVD.
MANHATTAN BEACH, CALIFORNIA 90266
PHONE NO. (310) 536-1100

PROJECT NUMBER	TSSC WORK RELEASE NO.
TSSC - 3	135

REV	DATE	DESCRIPTION	JCN	REDLINE DATE	APVD

DEPARTMENT OF TRANSPORTATION
FEDERAL AVIATION ADMINISTRATION
WESTERN PACIFIC REGION — LOS ANGELES, CALIFORNIA

SOUTHERN CALIFORNIA TRACON
OPERATIONS ROOM - ETG LAB

HVAC DUCT LAYOUT - SECOND FLOOR ETG LAB

SAN DIEGO — CA

REVIEWED BY
SUBMITTED BY: NOT FOR SIGNATURE
SYSTEM ENGINEER, ANI-940
APPROVED BY: NOT FOR SIGNATURE
PLATFORM MANAGER , ANI-940
DESIGNED: NL
DRAWN: RLH
CHECKED: DL
ISSUED BY
DATE: 05/28/04
JCN
DRAWING NO: WP-D-675-41800-M3
REV

$NAMES $TIMES $FILES $DATES

...\AWP-55\wp-d-675-41800-m3.dgn 07/09/2004 05:07:41 PM

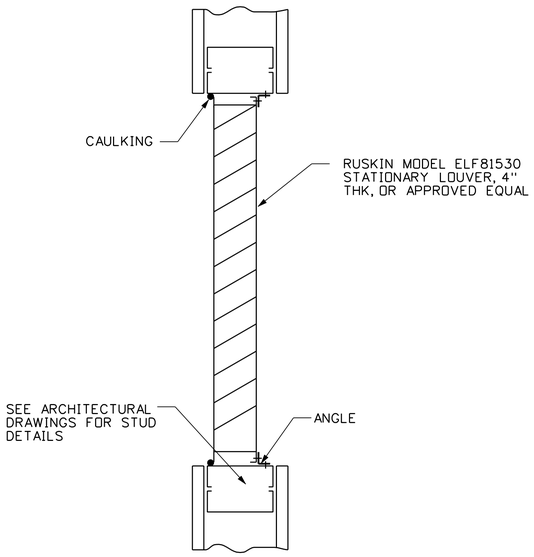

1 / M3 TYPICAL TRANSFER GRILLE DETAIL

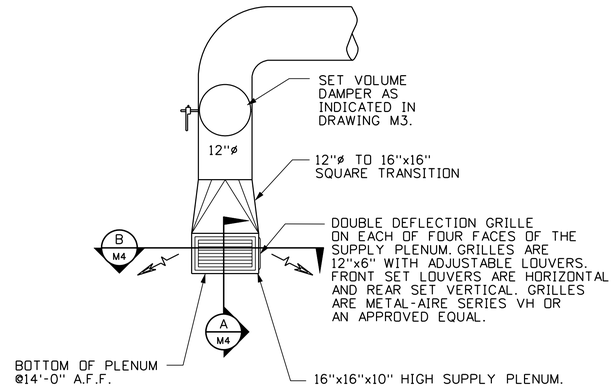

2 / M3 TYPE 2: SUPPLY AIR PLENUM W/GRILLES

TYP. OF 2

NOTES:

1. TYPICAL OF 4 GRILLES FOR TYPE 1 & 2 PLENUM. (SEE DRAWING M3 FOR THROW PATTERN)
2. PAINT PLENUM AND ALL GRILLE SURFACES WITH SEMI-GLOSS ENAMEL TO MATCH COLOR OF EXISTING SUPPLY PLENUMS.
3. COORDINATE TRANSFER GRILLE INSTALLATION WITH METAL SIDING CONTRACTOR.
4. FIELD LOCATE TRANSFER GRILLE AT SPECIFIED HEIGHT AND NEAR LOCATIONS SHOWN.

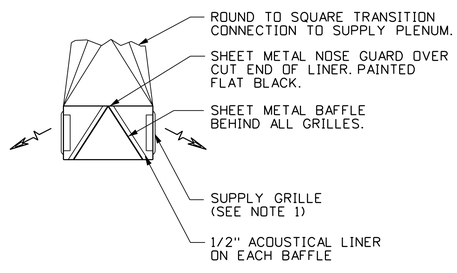

A / M4 SECTION THRU SUPPLY AIR PLENUM

NOT TO SCALE

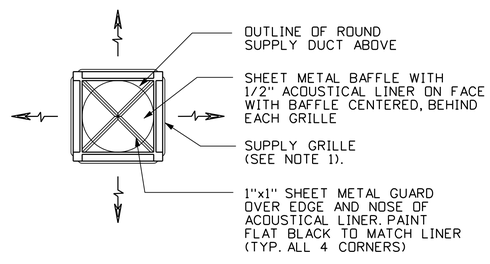

B / M4 PLAN VIEW OF SUPPLY AIR PLENUM

NOT TO SCALE

REV	DATE	DESCRIPTION	JCN	REDLINE DATE	APVD

DEPARTMENT OF TRANSPORTATION
FEDERAL AVIATION ADMINISTRATION
WESTERN PACIFIC REGION — LOS ANGELES, CALIFORNIA

SOUTHERN CALIFORNIA TRACON
OPERATIONS ROOM - ETG LAB

SUPPLY AIR PLENUM DETAILS

SAN DIEGO — CA

PARSONS
WESTERN PACIFIC REGION
CONTINENTAL PARK, SUITE 2500
3601 AVIATION BLVD.
MANHATTAN BEACH, CALIFORNIA 90266
PHONE NO. (310) 536-1100

PROJECT NUMBER	TSSC WORK RELEASE NO.
TSSC - 3	135

REVIEWED BY

SUBMITTED BY: NOT FOR SIGNATURE — SYSTEM ENGINEER, ANI-940

APPROVED BY: NOT FOR SIGNATURE — PLATFORM MANAGER , ANI-940

DESIGNED: NL
DRAWN: RLH
CHECKED: DL
ISSUED BY
DATE: 05/28/04 JCN
DRAWING NO: WP-D-675-41800-M4 REV

$NAME$ $TIME$ $FILE$ $DATE$

...\AWP-55\wp-d-675-41800-m4.dgn 07/09/2004 05:08:57 PM

NOTES:

1. INSTALL PER MANUFACTURER RECOMMENDATIONS AND INSTRUCTIONS.
2. VAV UNITS SHALL BE INDEPENDENTLY SUPPORTED. PROVIDE FACTORY SUPPLIED HANGER BRACKETS TO BE FIELD INSTALLED PER MANUFACTURERS INSTRUCTIONS.

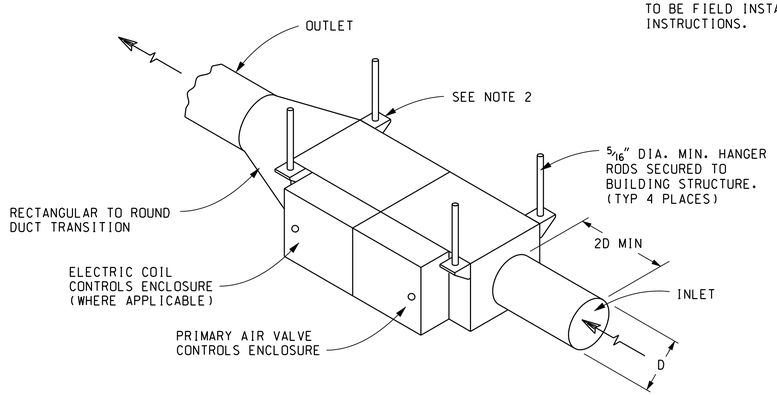

TYPICAL VAV TERMINAL UNIT DETAIL

NOT TO SCALE

PLAN MARK		PRIMARY AIR			ELECTRIC HEATING COIL		BASIS OF DESIGN
	INLET SIZE	CFM RANGE	MIN INLET ΔPs	MAX NC	HEAT REQUIRED	HEATER POLE/VOLT	
VAV-78	8"ϕ	470-220	0.02" W.G.	-	3kW	2/208	NAILOR INDUSTRIES, INC. MODEL 30RE, W/ INTEGRAL ELECTRIC REHEAT, PRESSURE INDEPENDENT (SEE NOTE 1)
VAV-79	24x16	2760-920	0.10" W.G.	-	-	-	NAILOR INDUSTRIES, INC. MODEL 3001. (SEE NOTE 2)

NOTES:

1. PROVIDE WITH FACTORY INSTALLED: INTEGRAL ELECTRIC REHEAT, 24VAC CONTROL TRANSFORMER, HANGER BRACKETS, TOGGLE TYPE DISCONNECT SWITCH AND DOOR INTERLOCK DISCONNECT SWITCH.
2. PROVIDE WITH FACTORY INSTALLED 24VAC CONTROL TRANSFORMER, HANGER BRACKETS, TOGGLE TYPE DISCONNECT SWITCH.

FUNCTION	VAV-78	VAV-79
SPACE TEMPERATURE CONTROL	X	X
SPACE TEMPERATURE INDICATION	X	X
START-STOP	X	X
DAMPER MODULATION	X	X
ELECTRIC HEATING	X	
DISCHARGE AIR TEMPERATURE SENSING	X	X
DISCHARGE AIR TEMPERATURE CONTROL (HEATING)	X	
AIR FLOW INDICATION	X	X

VAV POINT FUNCTION SCHEDULE

CONTROL SYSTEM NOTES:

1. VAV-78 AND VAV-79 SHALL BE CONTROLLED BY MEANS OF THE EXISTING ECMS SYSTEM CURRENTLY INSTALLED IN THE SCT AND SERVING THE CURRENT SPACE. THE CONTRACTOR SHALL BE RESPONSIBLE FOR ALL INTERFACING BETWEEN ALL CONTROL EQUIPMENT AND EQUIPMENT BEING CONTROLLED (VAV-78 AND VAV-79). ALL CONTROL ITEMS INSTALLED MUST BE THE PRODUCT OF, OR BE FULLY COMPATIBLE, WITH THE SAME EQUIPMENT MANUFACTURER USED IN THE EXISTING CONTROL SYSTEM (TELETROL, INSTALLED BY PACIFIC RIM MECHANICAL, TEL: (858) 974-6500)
2. PROVIDE CONTROL SYSTEMS TO MAINTAIN THE CONDITIONS INDICATED, TO PERFORM THE FUNCTIONS INDICATED, AND TO OPERATE IN THE SEQUENCE INDICATED. VAV OPERATION SHALL BE INDEPENDENT AND SHALL NOT AFFECT OPERATION OF EXISTING SYSTEM.
3. ALL CONTROLLED DEVICES SHALL HAVE AUTOMATIC CONTROL AND BE CAPABLE OF MANUAL OVERRIDE CONTROL.
4. NEW GRAPHIC SCREENS SHALL CONTAIN ALL LISTED POINTS AND ASSOCIATED SET-POINTS, WHICH SHALL BE USER ADJUSTABLE THROUGH THE GRAPHIC SCREEN. NEW GRAPHIC SCREENS SHALL BE LINKED TO EXISTING GRAPHIC SCREENS, WHERE APPLICABLE. NEW GRAPHIC SCREENS AND MENUING SYSTEM SHALL BE SUBMITTED TO THE FAA PE FOR APPROVAL.

VARIABLE AIR VOLUME BOX (VAV-78) WITH ELECTRIC REHEAT:

ON A RISE IN SPACE TEMPERATURE, THE DAMPER/ACTUATOR IS MODULATED TO INCREASES THE AIRFLOW. AT 2° F ABOVE THE COOLING SET POINT, THE MAXIMUM AIRFLOW IS MAINTAINED AT A PRESELECTED SETTING.
ON A DECREASE IN SPACE TEMPERATURE, THE DAMPER/ACTUATOR IS MODULATED TO DECREASE THE AIRFLOW UNTIL THE ROOM TEMPERATURE REACHES THE COOLING SET POINT, AT WHICH THE MINIMUM AIRFLOW IS MAINTAINED. MINIMUM AIRFLOW IS MAINTAINED UNTIL THE ROOM TEMPERATURE DROPS TO THE HEATING SET POINT. WHEN THE ROOM TEMPERATURE DROPS TO THE HEATING SET POINT, AND BELOW, THE THERMOSTAT HEATING MODE IS INITIATED, WHICH CAUSES THE ELECTRIC REHEAT TO BE ENERGIZED, AND THE DAMPER/ACTUATOR IS MODULATED TO THE PRESET AUXILIARY AIRFLOW LIMIT.

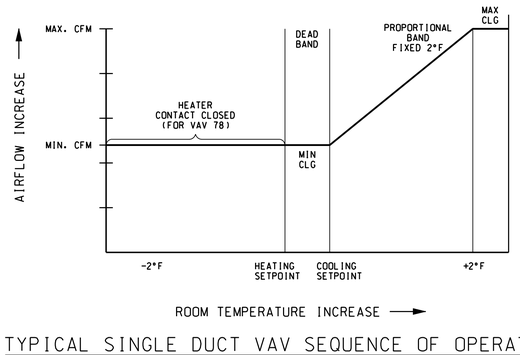

TYPICAL SINGLE DUCT VAV SEQUENCE OF OPERATIONS

VARIABLE AIR VOLUME BOX (VAV-79):

ON A RISE IN SPACE TEMPERATURE, THE DAMPER/ACTUATOR IS MODULATED TO INCREASE THE AIRFLOW. AT 2°F ABOVE THE COOLING SET POINT, THE MAXIMUM AIRFLOW IS MAINTAINED AT A PRESELECTED SETTING.
ON A DECREASE IN SPACE TEMPERATURE, THE DAMPER/ACTUATOR IS MODULATED TO DECREASE THE AIRFLOW UNTIL THE ROOM TEMPERATURE REACHES MINIMUM COOLING SET POINT, AT WHICH THE MINIMUM AIRFLOW IS MAINTAINED

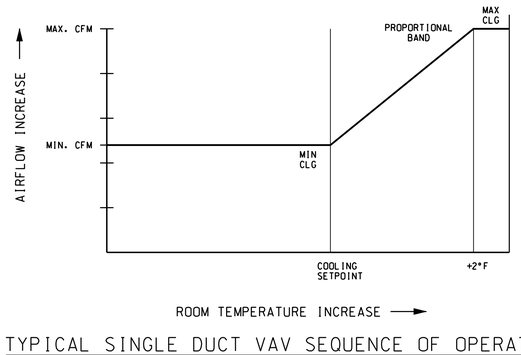

TYPICAL SINGLE DUCT VAV SEQUENCE OF OPERATIONS

PARSONS
WESTERN PACIFIC REGION
CONTINENTAL PARK, SUITE 2500
3601 AVIATION BLVD.
MANHATTAN BEACH, CALIFORNIA 90266
PHONE NO. (310) 536-1100

PROJECT NUMBER: TSSC - 3
TSSC WORK RELEASE NO.: 135

REV	DATE	DESCRIPTION	JCN	REDLINE DATE	APVD

DEPARTMENT OF TRANSPORTATION
FEDERAL AVIATION ADMINISTRATION
WESTERN PACIFIC REGION — LOS ANGELES, CALIFORNIA

SOUTHERN CALIFORNIA TRACON
OPERATIONS ROOM - ETG LAB
VAV TERMINAL BOX DETAIL

SAN DIEGO — CA

REVIEWED BY
SUBMITTED BY: NOT FOR SIGNATURE
SYSTEM ENGINEER, ANI-940
APPROVED BY: NOT FOR SIGNATURE
PLATFORM MANAGER , ANI-940
DESIGNED: NL
DRAWN: JF/RLH
CHECKED: DL
ISSUED BY
DATE: 05/28/04
JCN
DRAWING NO: WP-D-675-41800-M5
REV

...\AWP-55\wp-d-675-41800-m5.dgn 07/09/2004 05:09:47 PM

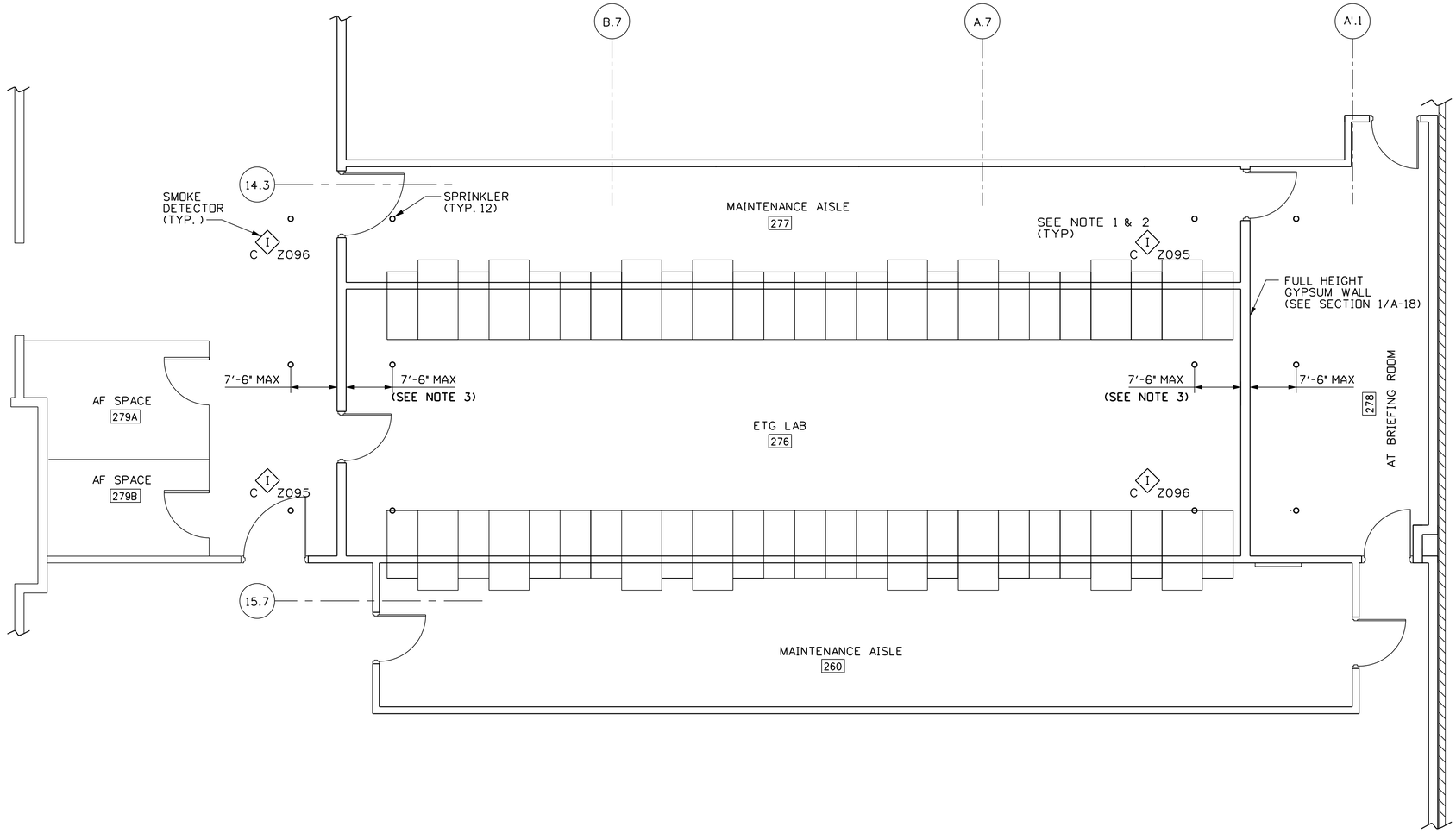

ETG LAB PLAN

1/4" = 1'-0"

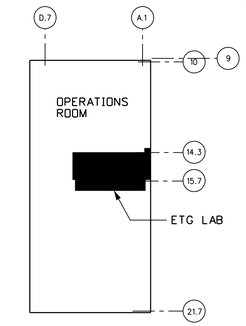

KEY PLAN
N.T.S.

NOTE:

1. CONTRACTOR TO PROVIDE AND INSTALL NEW SMOKE DETECTORS AND CONNECT TO EXISTING FIRE ALARM SYSTEM IN ACCORDANCE WITH NFPA72
2. CONTRACTOR TO PROVIDE SMOKE DETECTORS TO MATCH EXISTING DETECTORS (TYPE & MODEL) EXISTING FIRE ALARM SYSTEM WAS INSTALLED BY CERBERUS PYROTRONICS.
3. CONTRACTOR TO PROVIDE SPRINKLER IF EXISTING SPACING EXCEED ALLOWABLE.
4. CONTRACTOR SHALL SUBMIT FIRE ALARM AND SPRINKLER SHOP DRAWINGS TO AHJ FOR REVIEW.

4' 0 4' 8'

SCALE: 1/4" = 1'-0"

INTEGRITY FAA TSSC III PARSONS SAFETY QUALITY

PARSONS
WESTERN PACIFIC REGION
CONTINENTAL PARK, SUITE 2500
3601 AVIATION BLVD.
MANHATTAN BEACH, CALIFORNIA 90266
PHONE NO. (310) 536-1100

PROJECT NUMBER	TSSC WORK RELEASE NO.
TSSC - 3	135

REV	DATE	DESCRIPTION	JCN	REDLINE DATE	APVD

DEPARTMENT OF TRANSPORTATION
FEDERAL AVIATION ADMINISTRATION
WESTERN PACIFIC REGION LOS ANGELES, CALIFORNIA

SOUTHERN CALIFORNIA TRACON
OPERATIONS ROOM - ETG LAB

FIRE PROTECTION PLAN

SAN DIEGO CA

REVIEWED BY

SUBMITTED BY: NOT FOR SIGNATURE NOT FOR SIGNATURE NOT FOR SIGNATURE NOT FOR SIGNATURE
SYSTEM ENGINEER, ANI-940

APPROVED BY: NOT FOR SIGNATURE NOT FOR SIGNATURE NOT FOR SIGNATURE NOT FOR SIGNATURE
PLATFORM MANAGER, ANI-940

DESIGNED DL
DRAWN RLH
CHECKED ND
ISSUED BY

DATE 05/28/04 JCN

DRAWING NO WP-D-675-41800-M6 REV

$FILES $DATES $TIMES $NAMES

...\AWP-55\wp-d-675-41800-m6.dgn 07/09/2004 05:10:36 PM

NOTES

1. CONTRACTOR TO FIELD VERIFY DIMENSIONS FOR REMOVAL OF DUCT. REMAING DUCT TO BE REUSED PER DRAWING M3.

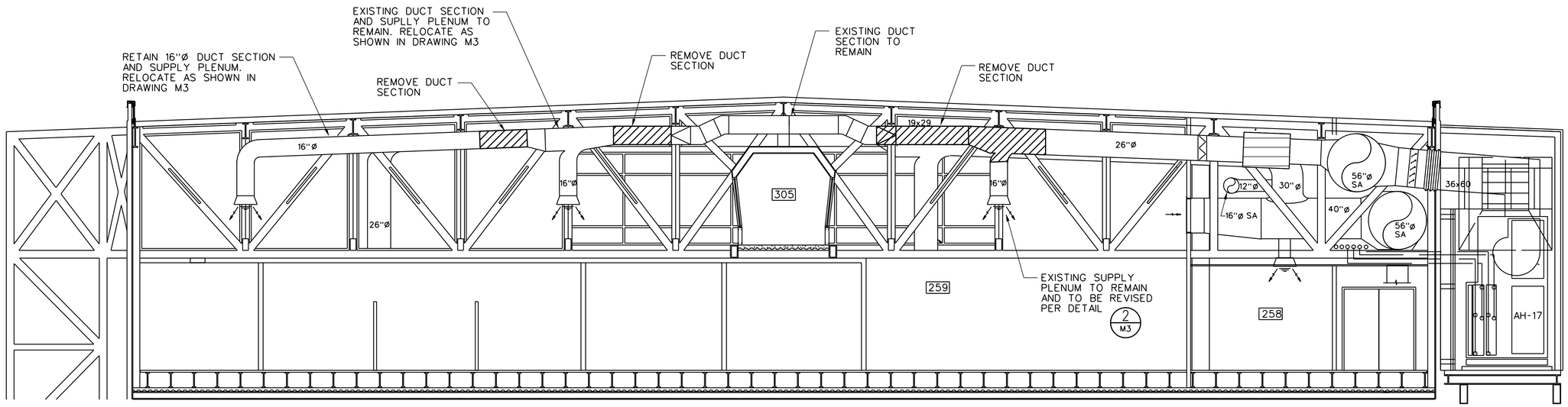

REV	DATE	DESCRIPTION	JCN	REDLINE DATE	APVD

DEPARTMENT OF TRANSPORTATION
FEDERAL AVIATION ADMINISTRATION

SOUTHERN CALIFORMIA TRACON
OPERATIONS ROOM - ETG LAB
HVAC DEMOLITION DETAILS

SAN DIEGO CA

PARSONS
WESTERN PACIFIC REGION
CONTINENTAL PARK, SUITE 2500
3601 AVIATION BLVD.
MANHATTAN BEACH, CALIFORNIA 90266
PHONE NO. (310) 536-1100

PROJECT NUMBER TSSC - 3
TSSC WORK RELEASE NO. 135

REVIEWED BY
SUBMITTED BY NOT FOR SIGNATURE
SYSTEM ENGINEER, ANI-940
APPROVED BY NOT FOR SIGNATURE
PLATFORM MANAGER, ANI-940
DESIGNED NL
DRAWN JAY
CHECKED
ISSUED BY
DATE 05/28/04
JCN
DRAWING NO WP-D-675-41800-M8
REV

ELEVATION VIEW FOR DEMOLITION
NOT TO SCALE

1
M8

$NAME$
$TIME$
$FILE$
$DATE$

...\AWP-55\wp-d-675-41800-m8.dgn 07/09/2004 05:13:51 PM

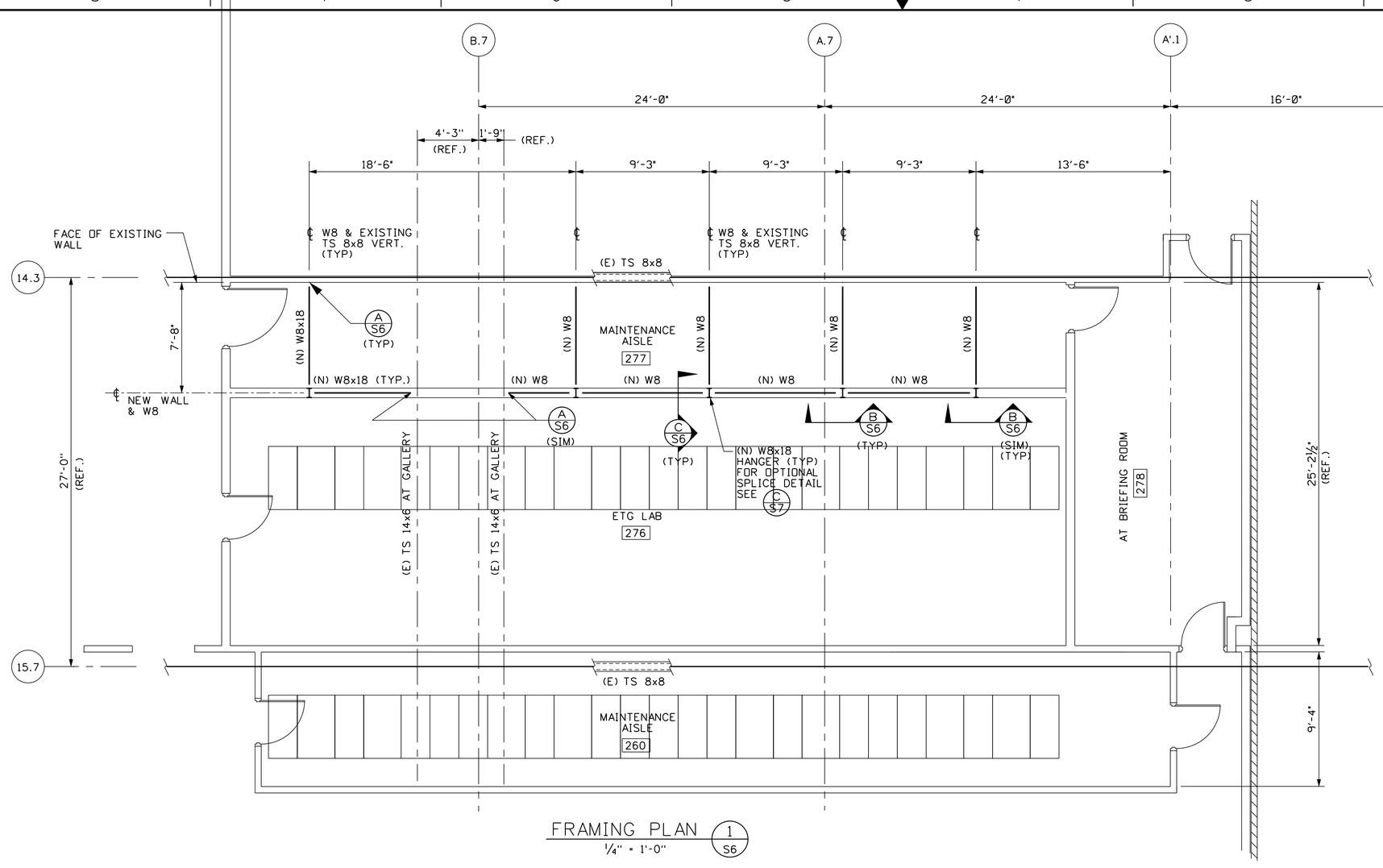

FRAMING PLAN 1 S6
¼" = 1'-0"

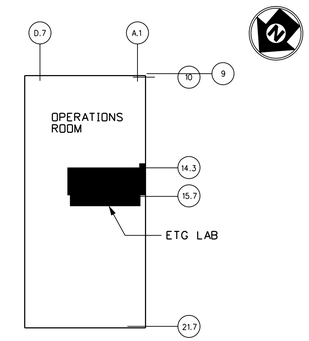

KEY PLAN

NOTES:

1. THE CONRACTOR SHALL TAKE ALL NECESSARY PRECAUTIIONS TO ENSURE THE INTEGRITY OF STRUCTURE AND SAFETY OF WORKERS DURING ALL PHASES OF CONSTRUCTION.
2. THE CONTRACTOR SHALL BE RESPONSIBLE FOR VERIFICATIONS OF ALL EXISTING DIMENSIONS AND CONDITIONS WITH DESIGN DRAWINGS PRIOR TO START OF CONSTRUCTION. NOTIFY THE ARCHITECT OF ANY DISCREPENSIES OR INCONSISTENCIES.
3. ALL STRUCTURAL STEEL WORK SHALL CONFIRM TO AISC " MANUAL OF STEEL CONSTRUCTION". 9TH EDITION.
4. STRUCTURAL STEEL SHALL CONFIRM TO ASTM A36 WITH fy = 36,000psi
5. WELDING ELECTRODE SHALL BE LOW-HYDROGEN E-70
6. ALL WELDING SHALL BE DONE BY AWS CERTIFIED WELDERS IN ACCORDANCE WITH AWS "STRUCTURAL WELDING CODE" AWS D1.1 AND ONLY AS INDICATED ON THE DRAWING.
7. ALL BOLTS FOR STRUCTURAL CONNECTIONS ARE A325 HIGH STRENGTH BOLTS.THEY SHALL BE INSTALLED IN ACCORDANCE WITH THE AISC SPECIFICATION FOR "STRUCTURAL JOINTS USING ASTM A325 OR A490 BOLTS" AND SHALL BE FIELD TESTED AND INSPECTED IN ACCORDANCE WITH SECTION 9. ALL HIGH STRENGTH BOLTS SHALL HAVE DIRECT TENSION INDICATORS OR SHALL BE LOAD INDICATOR BOLTS.
8. (E) DENOTES EXISTING CONSTRUCTION AND (N) DENOTES NEW CONSTRUCTION.
9. FOR LOCATION AND FRAMING DETAILS PERTAINING TO WALL PARTITIONS, SEE ARCHITECTURAL DRAWINGS.
10. DURING WELDING, CUTTING AND GRIND PROCEDURES, NEGATIVE AIR PRESSURE WITH EXHAUST TO EXTERIOR SHALL BE MAINTAINED. CONTRACTOR SHALL SUBMIT DETAILED PLAN PRIOR TO CONSTRUCTION ACTIVITIES.

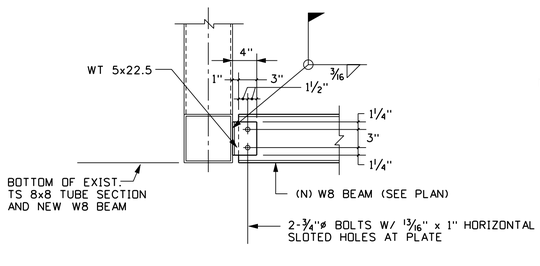

DETAIL A S6
1" = 1'-0"

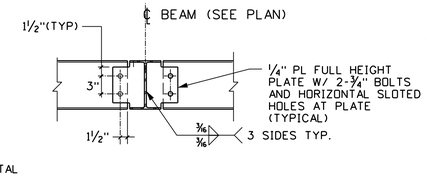

DETAIL B S6
1" = 1'-0"

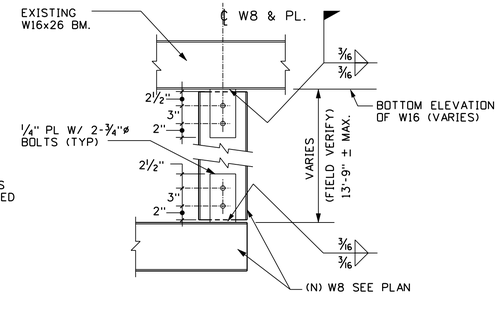

DETAIL C S6
1" = 1'-0"

REV	DATE	DESCRIPTION	JCN	REDLINE DATE	APVD

DEPARTMENT OF TRANSPORTATION
FEDERAL AVIATION ADMINISTRATION
WESTERN PACIFIC REGION — LOS ANGELES, CALIFORNIA

SOUTHERN CALIFORNIA TRACON
OPERATIONS ROOM - ETG LAB

STRUCTURAL PLAN & DETAILS

SAN DIEGO — CA

PARSONS
WESTERN PACIFIC REGION
CONTINENTAL PARK, SUITE 2500
3601 AVIATION BLVD.
MANHATTAN BEACH, CALIFORNIA 90266
PHONE NO. (310) 536-1100

PROJECT NUMBER	TSSC WORK RELEASE NO.
TSSC - 3	135

REVIEWED BY	SUBMITTED BY	APPROVED BY
	NOT FOR SIGNATURE NOT FOR SIGNATURE NOT FOR SIGNATURE NOT FOR SIGNATURE	NOT FOR SIGNATURE NOT FOR SIGNATURE NOT FOR SIGNATURE NOT FOR SIGNATURE
	SYSTEM ENGINEER, ANI-940	PLATFORM MANAGER, ANI-940

DESIGNED JS — ISSUED BY — DATE 05/28/04 — JCN
DRAWN RLH — DRAWING NO WP-D-675-41800-S6 — REV
CHECKED AA

...\AWP-55\wp-d-675-41800-s6.dgn 07/09/2004 05:15:08 PM

NOTES:

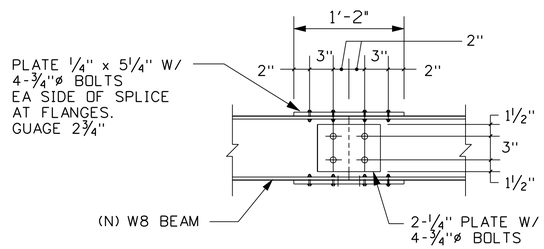

DETAIL

1" = 1'-0"

C
S7

PARSONS
WESTERN PACIFIC REGION
CONTINENTAL PARK, SUITE 2500
3601 AVIATION BLVD.
MANHATTAN BEACH, CALIFORNIA 90266
PHONE NO. (310) 536-1100

PROJECT NUMBER	TSSC WORK RELEASE NO.
TSSC - 3	135

REV	DATE	DESCRIPTION	JCN	REDLINE DATE	APVD

DEPARTMENT OF TRANSPORTATION
FEDERAL AVIATION ADMINISTRATION
WESTERN PACIFIC REGION — LOS ANGELES, CALIFORNIA

SOUTHERN CALIFORNIA TRACON
OPERATIONS ROOM - ETG LAB
STRUCTURAL DETAILS

SAN DIEGO — CA

REVIEWED BY

SUBMITTED BY: NOT FOR SIGNATURE
SYSTEM ENGINEER, ANI-950

APPROVED BY: NOT FOR SIGNATURE
PLATFORM MANAGER, ANI-950

DESIGNED: JS
DRAWN: RLH
CHECKED: AA
ISSUED BY

DATE: 05/28/04
JCN

DRAWING NO: WP-D-675-41800-S7
REV

$FILES
$DATES
$TIMES
$NAMES

...\AWP-55\wp-d-675-41800-s7.dgn 07/09/2004 05:32:12 PM

ELECTRICAL SYMBOL LEGEND

POWER

SYMBOL	MOUNTING HEIGHT, AFF	DESCRIPTION
WIRING DEVICES		
	•12"	SINGLE GROUNDED RECEPTACLE
	•12"	DUPLEX GROUNDED RECEPTACLE NEMA 5-15R
	•12"	DUPLEX GROUNDED RECEPTACLE NEMA 5-20R
GFI	•44"	DUPLEX GROUNDED RECEPTACLE W/ GROUND FAULT INTERRUPTER NEMA 5-15R
	•12"	DOUBLE DUPLEX GROUNDED RECEPTACLE NEMA 5-15R
		DOUBLE DUPLEX GROUNDED RECEPTACLE FLOOR MOUNTED NEMA 5-15R
	•12"	SPECIAL PURPOSE OUTLET
		NOTE: SUBSCRIPT ON RECEPTACLE INDICATES: D • DEDICATED CIRCUIT I • ISOLATED GROUND T • TAMPER PROOF U • UNINTERRUPTABLE POWER SUPPLY WP • WEATHER PROOF
S	•48"	SINGLE POLE WALL SWITCH
S_3	•48"	THREE-WAY SWITCH
		NOTE: SUBSCRIPT ON SWITCH INDICATES: K • KEY-OPERATED SWITCH D • DIMMER SWITCH P • SWITCH WITH PILOT LIGHT M • MANUAL MOTOR STARTER a • SWITCH CONTROLS "a" DESIGNATED FIXTURES
P		PHOTO CELL
PULL BOXES / JUNCTION BOXES		
J		CEILING
J		WALL
J		FLOOR
A		EQUIPMENT CONNECTION
MOTORS		
		COMBINATION MOTOR CONTROLLER
		DISCONNECT SWITCH
F		FUSED DISCONNECT SWITCH
GROUNDING		
		GROUND ROD
		AIR TERMINAL (LIGHTNING PROTECTION)
		EQUIPMENT GROUND PLATE SEE DETAIL 11 ON E8.3
G12 S		GROUND PLATE S-SINGLE POINT SYSTEM M-MULTIPOINT SYSTEM 12-PLATE NUMBER, SEE GROUND RISER DWG. E5.4
G		GROUND BAR (LENGTH TO SCALE)
MISCELLANEOUS		
T		TRANSFORMER (DRAWN TO SCALE ON PLANS)
		OUTDOOR TRANSFORMER (DRAWN TO SCALE ON PLANS)
CB		CIRCUIT BREAKER (DRAWN TO SCALE ON PLANS)

POWER PANELS

SYMBOL	MOUNTING HEIGHT, AFF	DESCRIPTION
	•78"(TOP)	3 PHASE,4 WIRE PANEL BOARD SURFACE MOUNTED
	•78"(TOP)	3 PHASE,4 WIRE PANEL BOARD FLUSH MOUNTED

PANELBOARD DESIGNATION

E R 1 A

- SEQUENTIAL UNIQUE IDENTIFIER LETTER FOR 208Y/120V PANELS, NUMBER FOR 480Y/277V PANELS
- LEVEL 1 THRU 3
- USAGE: C-CONTROL POWER, D-DISTRIBUTION, E-FAA EQUIPMENT, H-HOUSE, K-KITCHEN, L-LIGHTING, M-MEDICAL EQUIPMENT, R-RECEPTACLE
- POWER TYPE PREFIX: N-NON-ESSENTIAL, E-ESSENTIAL, C-CRITICAL

MCC E	MOTOR CONTROL CENTER E-ESSENTIAL
CBS	CENTRAL BATTERY SYSTEM

RACEWAYS

SYMBOL	DESCRIPTION
	CONDUIT, CONCEALED IN WALLS OR CEILING
	CONDUIT, EXPOSED
	CONDUIT, CONCEALED IN FLOOR
	CONDUIT TURNING DOWN
	CONDUIT TURNING UP
	FLEXIBLE CONDUIT L-LIQUID TIGHT EP-EXPLOSION PROOF
ER1A-17,19,21	NEUTRAL CONDUCTORS PHASE OR SWITCH LEG CONDUCTORS GROUND CONDUCTOR HOMERUN TO PANEL BOARD (•12 UNLESS INDICATED OTHERWISE) HOMERUN CALLOUT INDICATING CIRCUIT NUMBERS
	CABLE TRAY
	WIRE WAY
	DUCT BANK

LIGHTING

SYMBOL	DESCRIPTION
FLUORESCENT	
	SURFACE OR PENDANT
R	RECESSED
	SURFACE OR PENDANT ON ESSENTIAL POWER
R	RECESSED ON ESSENTIAL POWER
R	4-LAMP FIXTURE WITH 2-LAMPS ON ESSENTIAL POWER AND 2-LAMPS ON CENTRAL BATTERY SYSTEM
	STRIP LAMP
	WALL MOUNTED

NOTE: FLOURESCENT FIXTURES DRAWN TO SCALE

INCANDESCENT & COMPACT FLUORESCENT	
	PENDANT OR SURFACE MOUNTED
R	RECESSED
R	RECESSED WALL WASHER
	WALL MOUNTED
	RECESSED, SURFACE OR PENDANT MOUNTED ON ESSENTIAL POWER
HID	
	WALL MOUNTED
	RECESSED OR SURFACE MOUNTED
	RECESSED ON ESSENTIAL POWER
	FLOODLIGHT
EXIT	
	DOUBLE FACE EXIT SIGN CEILING MOUNTED ARROWS DENOTE EGRESS DIRECTION
	SINGLE FACE EXIT SIGN CEILING MOUNTED ARROW DENOTES EGRESS DIRECTION
	SINGLE FACE EXIT SIGN WALL MOUNTED ARROW DENTOES EGRESS DIRECTION

IDENTIFIERS

F2	LIGHTING FIXTURE WITH TYPE IDENTIFIER SEE LIGHTING FIXTURE SCHEDULE, DWG. E8.2
CWP-1	MECHANICAL EQUIPMENT IDENTIFIER
56	CONDUIT NUMBER SEE CONDUIT SCHEDULE DWG E6.6
36	KITCHEN EQUIPMENT IDENTIFIER SEE DWG E7.8 AND FS2.1
67,000A	AVAILABLE FAULT CURRENT SEE NOTE 3, DWG E5.1
173	ROOM DESIGNATION
2 E7.2	REFERENCE CALL OUT DETAIL 2 DRAWING NO. E7.2
R 2E	SUBSCRIPT NEXT TO WIRING DEVICE, LIGHT FIXTURE, EQUIPMENT CONNECTION, ETC. INDICATES: BRANCH CIRCUIT IDENTIFIER E-ESSENTIAL POWER SOURCE C-CRITICAL POWER SOURCE OR CENTRAL BATTERY SYSTEM I-ISOLATED POWER SOURCE NO SUBSCRIPT-NON-ESSENTIAL POWER SOURCE

SIGNAL/TELECOMMUNICATIONS

SYMBOL	MOUNTING HEIGHT, AFF	DESCRIPTION
TELEPHONE		
T_2	•12"	TELEPHONE OUTLET SUBSCRIPT DENOTES NUMBER OF PHONE LINES NO SUBSCRIPT • ONE LINE
T		FLOOR TELEPHONE OUTLET
		TELEPHONE TERMINAL BACKBOARD
COMPUTER		
T_2	•12"	COMPUTER TERMINAL OUTLET SUBSCRIPT DENOTES NUMBER OF COMPUTER LINES NO SUBSCRIPT • ONE LINE
T		FLOOR COMPUTER TERMINAL OUTLET
COMMUNICATIONS		
C	•12"	MISCELLANEOUS CABLE OUTLET
FIRE ALARM		
FA	•48"	MANUAL PULL STATION
H		HEAT DETECTOR
S C		SMOKE DETECTOR
		SUBSCRIPTS ON DETECTORS INDICATE ZONE NUMBER C-CEILING MOUNTED DEVICE F-BELOW RAISED FLOOR MOUNTED DEVICE D-DUCT DETECTOR
	•96"	AUDIO/ VISUAL ALARM
	•96"	MINIAUDIO/VISUAL ALARM
FAMP		FIRE ALARM MASTER PANEL
FAGA		GRAPHIC ANNUNCIATOR BOARD
FARA		MASTER REMOTE ANNUNCIATOR PANEL
	•96"	REMOTE ALARM LAMP
R		RELAY
P	•48"	PANIC SHUTDOWN PUSHBUTTON
A	•48"	ABORT PUSHBUTTON
		SPRINKLER FLOW SWITCH
SECURITY		
		ELECTRIC DOOR LOCK
		DOOR POSITON INDICATOR (X • NUMBER OF INDICATORS) NO SUBSCRIPT • ONE INDICATOR
WP		SECURITY CAMERA WP• WEATHER PROOF HOUSING
SC		SECURITY CONSOLE
		SECURITY MONITOR
	•42"	MAGNETIC CARD READER
	•54"	INTERCOM REMOTE STATION JUNCTION BOX
		ELETROMAGNETIC DOOR RELEASE
		REQUEST FOR EXIT
AS		AREA SENSOR, INFARED WITH COVERAGE AREA
		DURESS ALARM
PAGING		
S S1 Z2		SPEAKER-MOUNTED FLUSH IN CEILING S1 • SPEAKER TYPE 1 Z2 • ZONE 2
S H S1 Z2		SPEAKER-WALL MOUNTED S1 • SPEAKER TYPE 1 Z2 • ZONE 2
SA	•48"	SOUND ATTENUATOR

FOR REFERENCE ONLY

ONE-LINE DIAGRAM

	DRAWOUT LARGE AIR CIRCUIT BREAKER		BUS DUCT		BATTERY
3P-100	CIRCUIT BREAKER, 3-POLE, 100 AMP FRME		POWER TRANSFORMER	A	INSTRUMENT A-AMMETER, V-VOLTMETER
2P-30	DISCONNECT SWITCH, 2-POLE, 30 AMP		CURRENT TRANSFORMER	M	MOTOR
	FUSIBLE SWITCH				GROUNDING
	THERMAL OVERLOAD		STATIC SWITCH	GFE	GOVERNMENT FURNSHED EQUIPMENT
	FUSE			GFGI	GOVERNMENT FURNSHED GOVERNMENT INSTALLED EQUIPMENT
	TRANSFER SWITCH		RECTIFIER	I	INTERLOCK
			INVERTER	S	STARTER

SP 12	MATCH POINT
	SURGE PROTECTOR/LIGHTNING ARRESTER
	FUSED SWITCH 15KV

REV	DATE	DESCRIPTION	JCN	REDLINE DATE	APVD
		ISSUE FOR REFERENCE ONLY			

DEPARTMENT OF TRANSPORTATION
FEDERAL AVIATION ADMINISTRATION
WESTERN PACIFIC REGION — LOS ANGELES, CALIFORNIA

SOUTHERN CALIFORNIA TRACON
TRACON CONSOLIDATION

SYMBOL LEGEND

SAN DIEGO — CA

REVIEWED BY	SUBMITTED BY: NOT FOR SIGNATURE	APPROVED BY: NOT FOR SIGNATURE
	SYSTEM ENGINEER, ANI-940	PLATFORM MANAGER, ANI-940
	DESIGNED R.T. / ISSUED BY	DATE 03/11/04 / JCN
	DRAWN E.H.	DRAWING NO REF-WP-E-675-41800-E0.1 / REV
	CHECKED	

$NAME$ $TIME$ $FILE$ $DATE$

...\ref_of_wp-e-675-41800-e0_1.dgn 07/09/2004 02:42:15 PM